STATYBOS PRODUKCIJOS SERTIFIKAVIMO CENTRAS
Saulėtekio al. 3, LT-10257 Vilnius, Lithuania
Tel +370 5 2728077, centras@spsc.lt,
www.spsc.lt

Designated according to Article 29 of Regulation (EU) 305/2011

Member of EOTA
www.eota.eu

European Technical Assessment

ETA-15/0447 of 2026-08-18

General Part

Technical Assessment Body issuing the European Technical Assessment:

Statybos produkcijos sertifikavimo centras

Trade name of the construction product	**Purlin tie:** **- GJ 170 × 2 (D) right and 170 × 2 (K) left;** **- GJ 210 × 2 (D) right and 210 × 2 (K) left;** **- GJ 250 × 2 (D) right and 250 × 2 (K) left;** **- GJ 290 × 2 (D) right and 290 × 2 (K) left;** **- GJ 330 × 2 (D) right and 330 × 2 (K) left;** **- GJ 370 × 2 (D) right and 370 × 2 (K) left**
Product family to which the above construction product belongs	**Product area code: 13** **Three-dimensional nailing plates** **Purlin ties for timber to timber connections**
Manufacturer	**UAB "Ardetas"** **Žirmūnų g. 46-40, LT-09227 Vilnius Lithuania** www.ardetas.lt
Manufacturing plant	**UAB "Ardetas"** **Arnionių g. 60, LT-18170 Pabradė, Švenčionių district, Lithuania**
This European Technical Assessment contains	**19 pages including 4 Annexes which form an integral part of this assessment.** **Annex – Control plan contain confidential information and is not included in the European Technical Assessment when that assessment is publicly disseminated**
This European Technical Assessment is issued in accordance with Article 95(4) of Regulation (EU) 2024/3110, on the basis of	**EAD 130186-00-0603** **Three dimensional nailing plates**
This version replaces	**ETA-15/0447 issued on 6 August 2015**

Translations of this European Technical Assessment in other languages shall fully correspond to the original issued document and should be identified as such.

Communication of this European Technical Assessment, including transmission by electronic means, shall be in full (excepted the confidential Annex(es) referred to above). However, partial reproduction may be made, with the written consent of the issuing Technical Assessment Body. Any partial reproduction has to be identified as such.

Specific Parts

1. Technical description of the product

Purlin ties, right (D) and left (K) GJ 170×2, GJ 210×2, GJ 250×2, GJ 290×2, GJ 330×2 and GJ 370×2 given in ANNEX 2 are one-piece non-welded face fixed purlin ties to be used in timber to timber connections.

Purlin ties are connected to construction members made of timber or wood-based products by ringed shank nails.

The purlin ties are made from hot-dip zinc coated steel DX51D+Z275 according to standard EN 10346:2015[1] with minimum yield strength R_e of 250 MPa, minimum tensile strength R_m of 330 MPa and minimum elongation A_{80} of 22 %. The purlin ties are made from steel with normal thickness tolerances according to EN 10143:2006[2].

Product details and definitions are given in ANNEX 1.

Purlin ties form, dimensions, hole positions are shown in the ANNEX 2.

Characteristic load-carrying capacities of purlin ties are given in the ANNEX 3.

Number and positions of nails in the purlin ties are shown in the ANNEX 4.

2. Specifications of the intended use in accordance with the applicable European Assessment Document (hereinafter EAD)

Intended use of the purlin ties are the connections between a beam and a purlin of load bearing timber structures, where the requirements for mechanical resistance, stability and safety in use in the sense of the Basic Requirements 1 and 4 of Regulation (EU) 2024/3110[3] of the European Parliament and of the Council of 27 November 2024 shall be fulfilled.

The wood members may be of solid timber or glued laminated timber with a characteristic density not greater than 500 kg/m³. This requirement for material of the wood members may be fulfilled by using the following materials:

- structural solid timber in accordance with EN 338:2016[4] / EN 14081-1:2005+A1:2011[5];
- structural finger jointed solid timber (softwood) in accordance with EN 15497:2014[6];
- glued laminated timber in accordance with EN 14080:2013[7];
- glued solid timber in accordance with EN EN 14080:2013;
- cross laminated timber (softwood) in accordance with European Technical Assessment, arrangement of the nails only perpendicular to the lateral face;
- laminated veneer lumber LVL (softwood) in accordance with EN 14374:2004[8], arrangement of the nails only perpendicular to the plane of the veneers;
- plywood (softwood) in accordance with standard EN 636:2012+A1:2015[9] and EN 13986:2004+A1:2015 [10], arrangement of the nails only perpendicular to the plane of the plies.

---

1 EN 10346:2015 Continuously hot-dip coated steel flat products for cold forming - Technical delivery conditions.

2 EN 10143:2006 Continuously hot-dip coated steel sheet and strip - Tolerances on dimensions and shape.

3 Regulation (EU) 2024/3110 of the European Parliament and of the Council of 27 November 2024 laying down harmonised rules for the marketing of construction products and repealing Regulation (EU) No 305/2011.

4 EN 338:2016Structural timber - Strength classes.

5 EN 14081-1:2005+A1:2011 Timber structures - Strength graded structural timber with rectangular cross section - Part 1: General requirements.

6 EN 15497:2014 Structural finger jointed solid timber - Performance requirements and minimum production requirements

7 EN 14080:2013 Timber structures - Glued laminated timber and glued solid timber – Requirements.

8 EN 14374:2004 Timber structures - Structural laminated veneer lumber – Requirements.

9 EN 636:2012+A1:2015 Plywood - Specifications.

The static and kinematic behaviour of the timber members or the supports shall be as described in ANNEX 3.

ANNEX 3 states the load-carrying capacities of the purlin ties connections for a characteristic density of 350 kg/m³. For other timber densities, the value of $F_{1.k}$ shall be adjusted accordingly.

The load-bearing capacity calculations of the connection were carried out in accordance with the requirements of standards:

- EN 1995-1-1:2004 Eurocode 5: Design of timber structures - Part 1-1: General - Common rules and rules for buildings;

The scope of the purlin ties regarding resistance to corrosion shall be defined according to national provisions that apply at the installation site considering environmental conditions and in conjunction with the admissible service conditions according to Eurocode EN 1995-1-1 and the admissible corrosivity category as described and defined in standard EN ISO 12944-2.

The verifications and assessment methods on which this European Technical Assessment is based lead to the assumption of a working life of the purlin ties of at least 50 years.

The indications given on the working life cannot be interpreted as a guarantee given by the producer, but are to be regarded only as a means for choosing the right products in relation to the expected economically reasonable working life of the works.

[10] EN 13986:2004+A1:2015 Wood-based panels for use in construction - Characteristics, evaluation of conformity and marking.

3. Performance of the product and references to the methods used for its assessment

3.1. Structural integrity of construction works (BWR 1)

Essential characteristic	Performance
Joint strength	See Annex 3
Joint stiffness	No performance assessed
Joint ductility	No performance assessed
Resistance to seismic actions	No performance assessed
Resistance to corrosion and deterioration	Hot-dip zinc-coated steel Z275 according to EN 10346

3.2. Fire safety of construction works (BWR 2)

Essential characteristic	Performance
Reaction to fire	Class A1
Resistance to fire	No performance assessed

The purlin ties are made from steel classified as Euroclass A1 in accordance with EN 13501-1:2007+A1:2009[11] and EC decision 96/603/EC[12], amended by EC Decision 2000/605/EC[13]

3.3. Protection against adverse hygiene and health impacts related to construction works (BWR 3)

Essential characteristic	Performance
Release of dangerous substances	No performance assessed

3.4. Methods of verification

Safety principles and partial factors

The characteristic load-carrying capacities are based on the characteristic values of the nail connections, timber components and steel plates. To obtain design values the capacities have to be divided by different partial factors of the material properties, the nail connection and the timber components in addition multiplied with the coefficient k_{mod}.

The characteristic load-carrying capacity of the connection is given in the tables, whereas the design load-bearing capacity $F_{1.\text{d}}$ shall be calculated as follows:

$$F_{1.d} = \frac{F_{1.k} \cdot k_{\text{mod}}}{\gamma_M}$$

where:

$F_{1.k}$ – characteristic load-bearing capacity;

k_{mod} – modification factor taking into account the effects of load duration and moisture content. The fasteners are intended for use in timber structures under dry indoor

11 EN 13501-1:20$_{18}$ Fire classification of construction products and building elements - Part 1: Classification using data from reaction to fire tests EN 13501-1:2018.

12 OJ L 267, 19.10.1996, p. 23.

13 OJ L 258, 12.10.2000, p. 36

conditions, defined as service classes 1 and 2 in accordance with EN 1995-1-1, and for connections subjected to permanent or quasi-permanent loads;

γ_M – partial factor for a material property.

Threaded nails are used for fastening the steel components to timber.

The minimum edge distances and end distances of the timber members shall comply with the requirements of EN 1995-1-1.

3.5. Mechanical resistance and stability

Annex 2 states the load-carrying capacities of the purlin ties connections for a characteristic density of 350 kg/m³ of wood based structural members. For other timber densities, the value of $F_{1.k}$ shall be adjusted accordingly.

For joints shall be used threaded nails according to EN 14592:2008+A1:2012[14] with diameter 4,0 mm. Threaded nails types may be used with values of axial characteristic load-carrying capacity $f_{ax,k}$ per nail not less than 7,8 MPa, and with the characteristic fastener yield moment – $M_{y,Rk}$ *equal to or greater than 7168 Nmm.*

The characteristic capacities of the purlin ties are determined by calculation as described in the EAD 130186-00-0603. They should be used for designs in accordance with Eurocode 5 or a similar national Timber Code.

The wood members shall have the thickness which is larger than the penetration depth of the nails into the members.

No performance has been determined in relation to the joint's stiffness properties - to be used for the analysis of the serviceability limit state

No performance has been assessed in relation to ductility of a joint under cyclic testing. The contribution to the performance of structures in seismic zones, therefore, has not been assessed.

3.6. Aspects related to the performance of the product

Corrosion protection in service class 1 and 2

In accordance with EAD 130186-00-0603 the purlin ties have a hot-dip zinc coating weight Z275 (275 g/m^2 on both surfaces). The steel employed is DX51D + Z275 according to standard EN 10346:2015 with $R_e \geq 250$ N/mm², $R_m \geq 330$ N/mm² and $A_{80} \geq 22\%$.

The purlin ties are primarily intended for use in timber structures subject to the dry, internal conditions defined by service class 1 and 2 of Eurocode 5 and for connections subject to static or quasi-static loading. The purlin ties can also be used in outdoor structures, defined by service class 3, when a corrosion protection in accordance with Eurocode 5 is applied, or when stainless steel with similar or better characteristic yield, ultimate strength and ductility is employed.

3.7. General aspects related to the use of the product

A connector – three-dimensional nailing plates is deemed fit for its intended use provided:

- joints are designed in accordance with Eurocode 5 or an appropriate national regulation for timber constructions design under the responsibility of an engineer experienced in timber structures;
- the structural members to which the three-dimensional nailing plates are fixed shall be restrained against rotation;
- the structural members of solid timber shall be of strength class C14 or better;
- the structural members of glulam shall be of strength class GL24 or better;

[14] EN 14592:2008+A1:2012 Timber structures - Dowel-type fasteners – Requirements

- the structural timber members shall be free from wane under the purlin ties;
- the tensile strength perpendicular to the grain capacity of the timber member to be used in conjunction with the purlin ties is to be checked by the designer of the structure to ensure that it is not less than the purlin ties capacity and, if necessary, the purlin ties capacity shall be reduced accordingly;
- for cross laminated timber, LVL and plywood the arrangement of the nails shall be only perpendicular to the lateral face or plane of the veneers;
- the gap between the timber members does not exceed 3 mm;
- there are no specific requirements relating to preparation of the timber members.

The fitness for use of the joint can be assumed if the connector is installed correctly in accordance with the following requirements:

- installation is carried out by personnel under the direction of supervisors, which are appropriately qualified for this work;
- installation is in accordance with the manufacturer's specifications and drawings prepared for that purpose, and the appropriate tools are used;
- the specified fasteners are used.

4. Assessment and verification of constancy of performance (AVPC) system applied, with reference to its legal base

In accordance with European Assessment Document EAD No. 130186-00-0603 the applicable European legal act is: 97/638/EC.

The system to be applied is: 2+.

5. Technical details necessary for the implementation of the AVCP system, as provided for in the applicable EAD

Technical details necessary for the implementation of the AVCP system are laid down in the control plan deposited at Statybos produkcijos sertifikavimo centras (SPSC) prior to CE marking.

5.1. Responsibility of the manufacturer

It is the responsibility of the manufacturer to ensure that the information on the specific conditions given in this European technical assessment, is given to those concerned. This information may be made by replicating the respective parts of this European Technical Assessment. In addition, all installation data shall be shown clearly on the package and / or on an instruction sheet, preferably using illustration(s).

5.2. Recommendations on packaging, transport and storage

The purlin ties are packed in boxes bearing the manufacturer's name, product type, dimensions, quantity, date of fabrication and batch reference details.

In relation to transportation and storage, the connectors should be treated as conventional metallic building products.

Issued in Vilnius on 2026-08-18
by
Statybos produkcijos sertifikavimo centras (SPSC)



Director
Valdemaras Gauronskis

ANNEX 1. Product details and definitions

Table A.1.1. Purlin ties type, overall dimensions, steel and coating specification.

Purlin ties type		Steel thickness (mm)	Steel and coating specification [1)]
GJ	170×2 (D+K)	2,0	EN 10346 - DX51D + Z275
GJ	210×2 (D+K)	2,0	EN 10346 - DX51D + Z275
GJ	250×2 (D+K)	2,0	EN 10346 - DX51D + Z275
GJ	290×(D+K)	2,0	EN 10346 - DX51D + Z275
GJ	330×2 (D+K)	2,0	EN 10346 - DX51D + Z275
GJ	370×2 (D+K)	2,0	EN 10346 - DX51D + Z275

[1)] requirements according purlin ties manufacturer‘s UAB “Ardetas” documentation:
- minimum yield strength, $R_{po,2}$ or R_{eL} – 250 MPa;
- minimum tensile strength, R_m – 330 MPa;
- minimum elongation, A_{80} – 22 % (according requirements of EN 10346:2015)

ANNEX 2. Purlin ties form, dimensions, hole positions

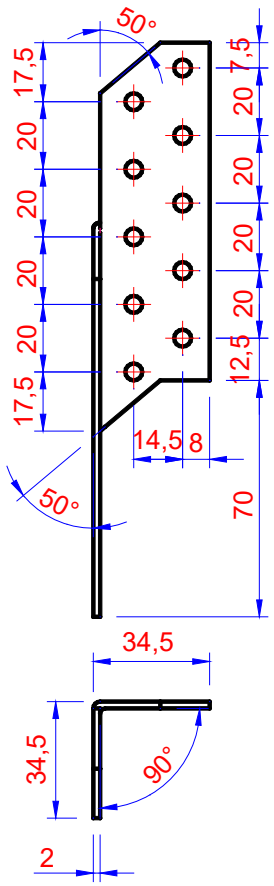

Figure A.2.1. Purlin tie GJ 170×2 (D)

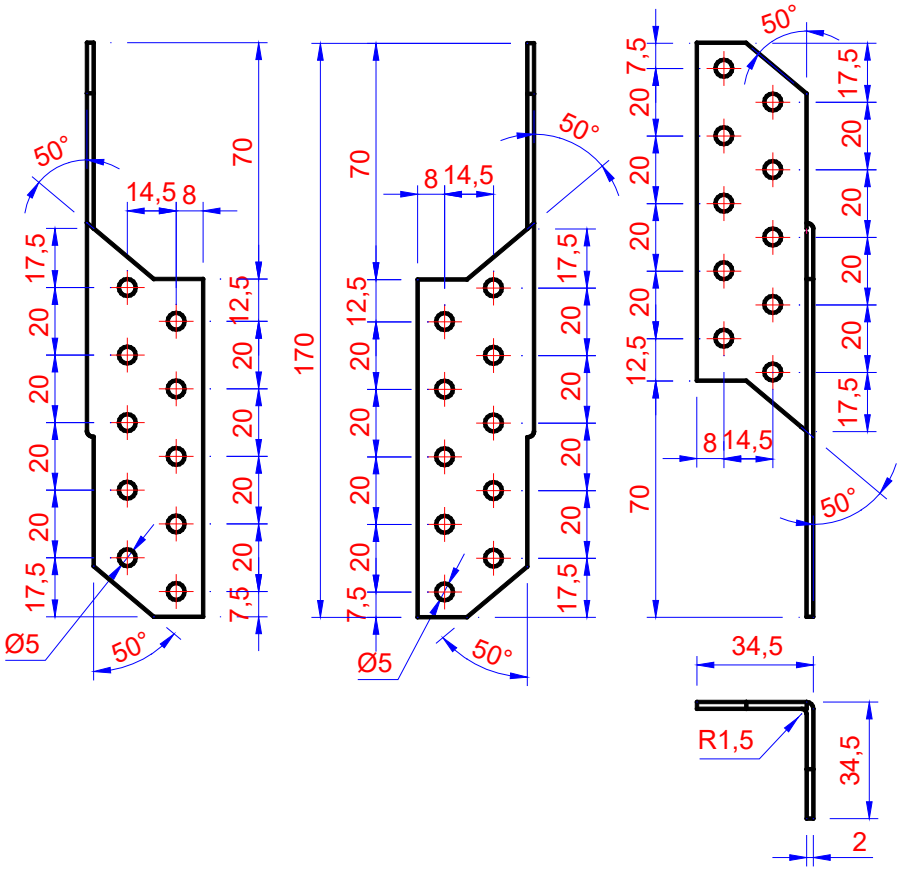

Figure A.2.2. Purlin tie GJ 170×2 (K)

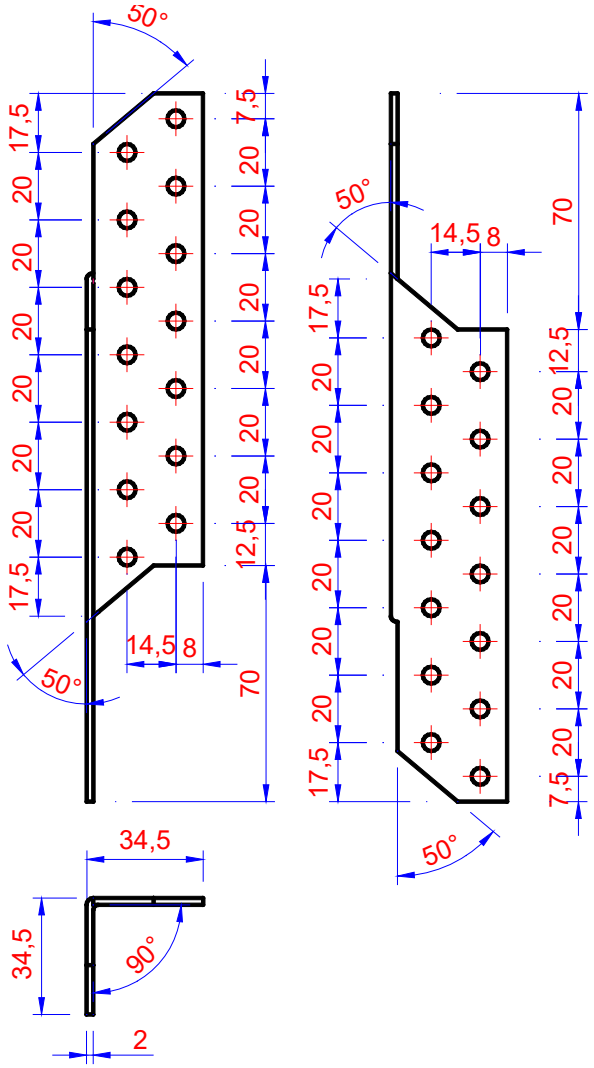

Figure A.2.3. Purlin tie GJ 210×2 (D)

Figure A.2.4. Purlin tie GJ 210×2 (K)

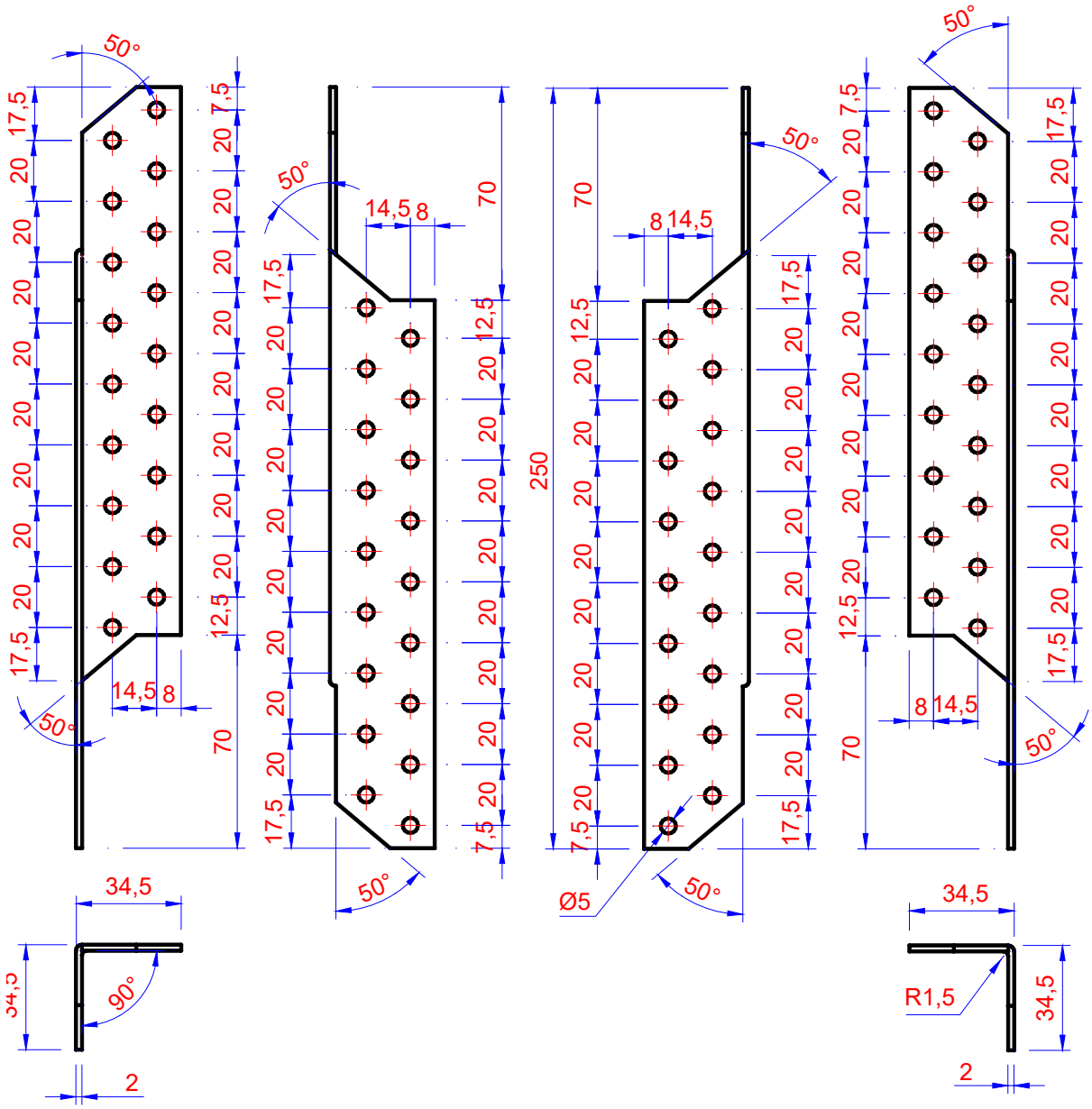

Figure A.2.5. Purlin tie GJ 250×2 (D)

Figure A.2.6. Purlin tie GJ 250×2 (K)

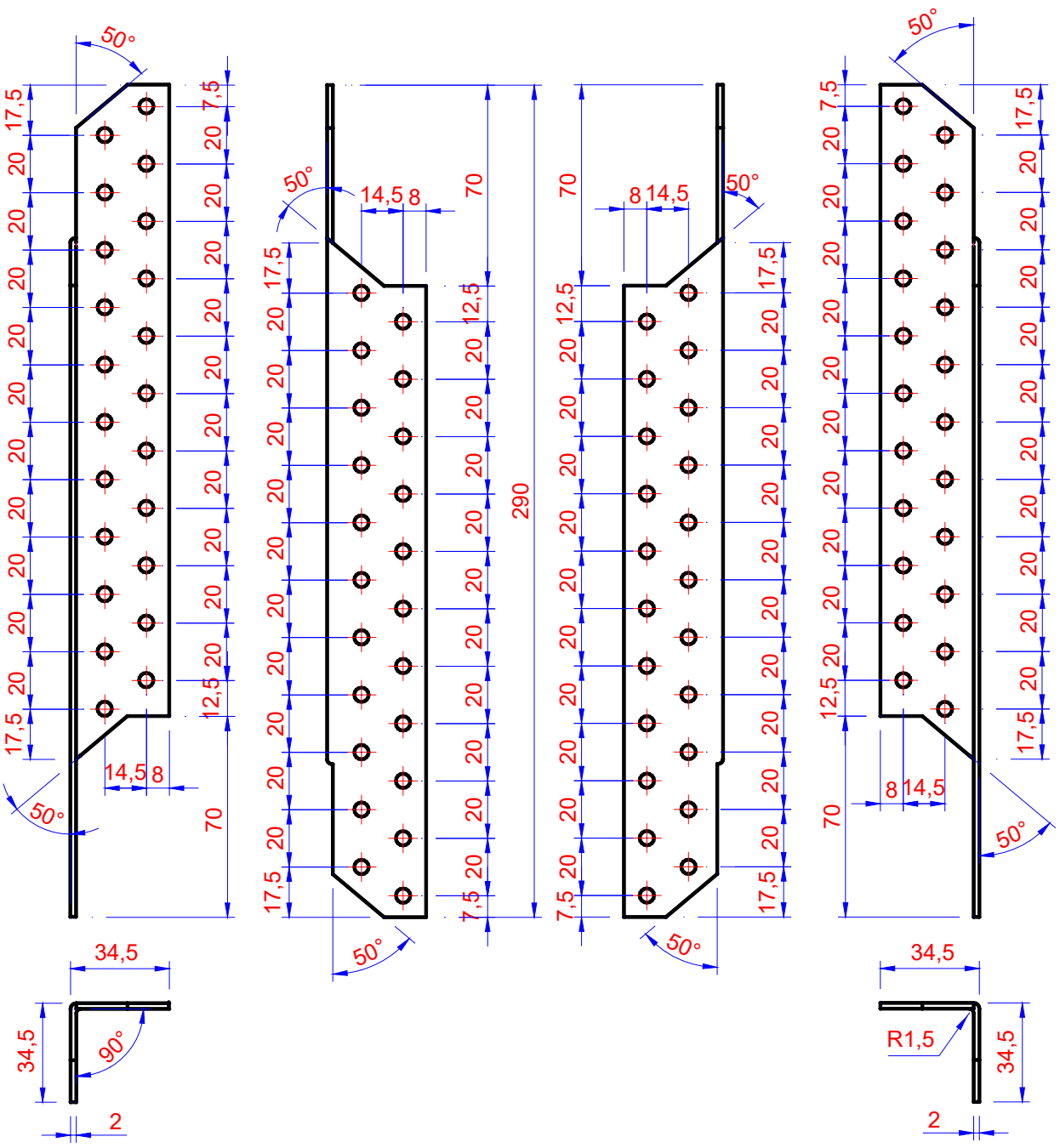

Figure A.2.7. Purlin tie GJ 290×2 (D)

Figure A.2.8. Purlin tie GJ 290×2 (K)

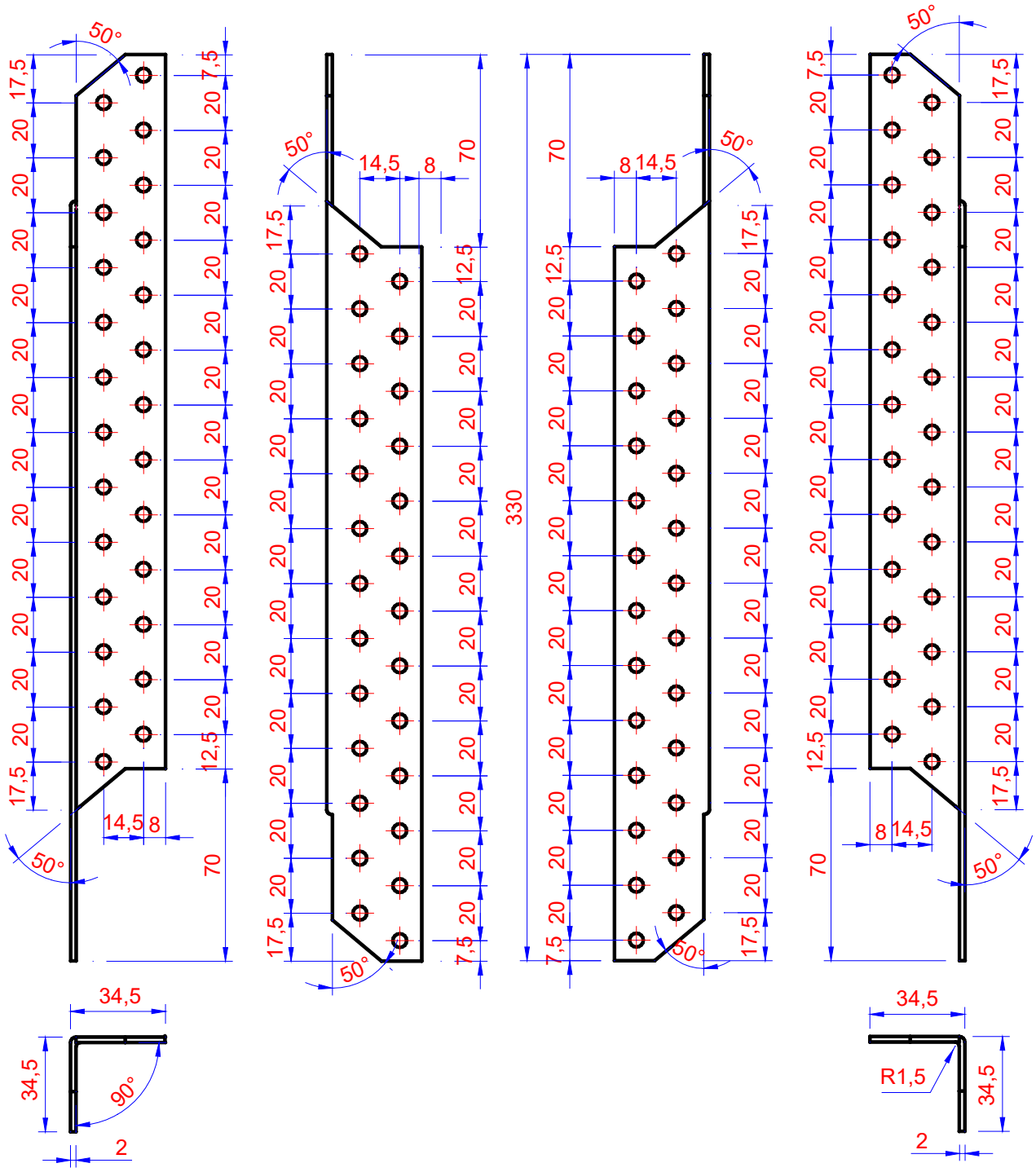

Figure A.2.9. Purlin tie GJ 330×2 (D)

Figure A.2.10. Purlin tie GJ 330×2 (K)

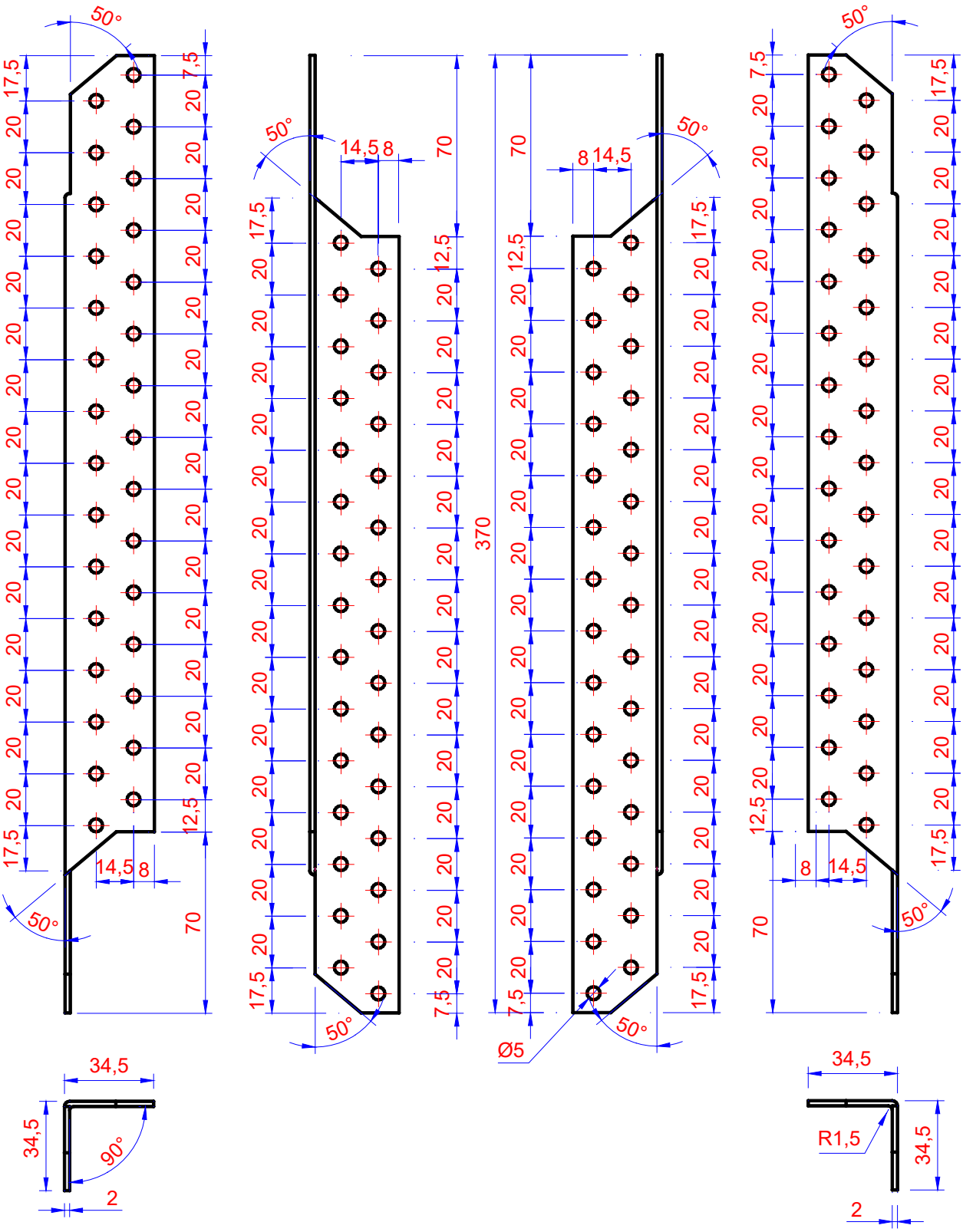

Figure A.2.11. Purlin tie GJ 370×2 (D)

Figure A.2.12. `` Purlin tie GJ 370×2 (K)

ANNEX 3. Characteristic load-carrying capacities of purlin ties

Support conditions

The distance between the timber members in the area of the connection must not exceed 3 mm. The members shall be prevented from rotation.

Fastener specification

Number and position of nails presented in the Annex 4.

Wane

Wane is not allowed; the timber has to be sharp-edged in the area of the contact with the purlin tie.

Characteristic load-carrying capacities

A.3.1. Timber beam to timber purlin connections with the purlin tie

The structural calculation model of timber beam to timber purlin connection with the purlin ties is showed in Figure A.3.1.

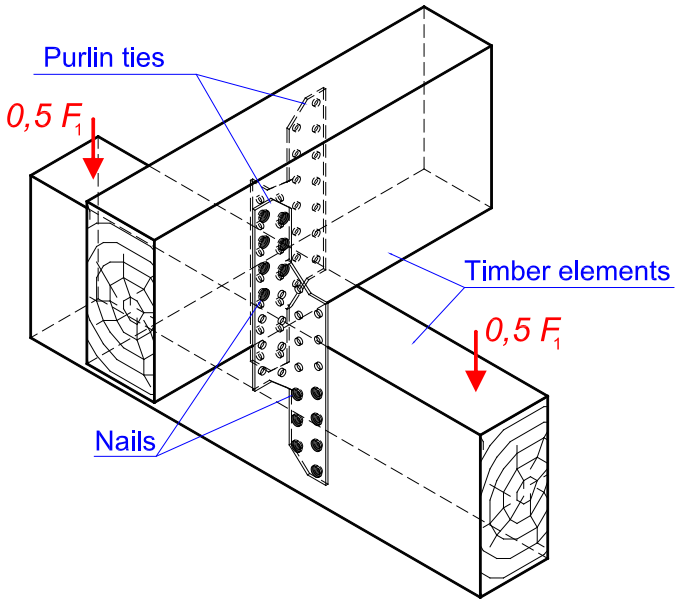

Figure A.3.1 Typical installation of the purlin tie in the timber beam to timber purlin connections

The characteristic load-bearing capacity $F_{1.k}$ of the joint connecting the timber beam to the timber purlin is given in Table A.3.1.

Table A.3.1. Characteristic load-carrying capacities $F_{1,k}$ of timber beam to timber purlin connection for load direction according Figure A.3.1.

Purlin tie type		Nails dimensions (mm)	Number of nails in		Position of nails shown in Figure [2)]	$F_{1,k}$ kN
			lower beam	upper purlin		
GJ	170×2 (D+K)	40 × 4,0	10	10	A.4.1	11,5
GJ	210×2 (D+K)	40 × 4,0	14	14	A.4.2	16,1
GJ	250×2 (D+K)	40 × 4,0	18	18	A.4.3	20,7
GJ	290×(D+K)	40 × 4,0	22	22	A.4.4	25,5
GJ	330×2 (D+K)	40 × 4,0	26	26	A.4.5	29,9
GJ	370×2 (D+K)	40 × 4,0	30	30	A.4.6	34,5
[1)] see Annex 4						

When load-carrying capacity is calculated the possibility of splitting caused by the tension perpendicular to the grain, shall be taken into account.

ANNEX 4. Number and positions of nails in the purlin ties

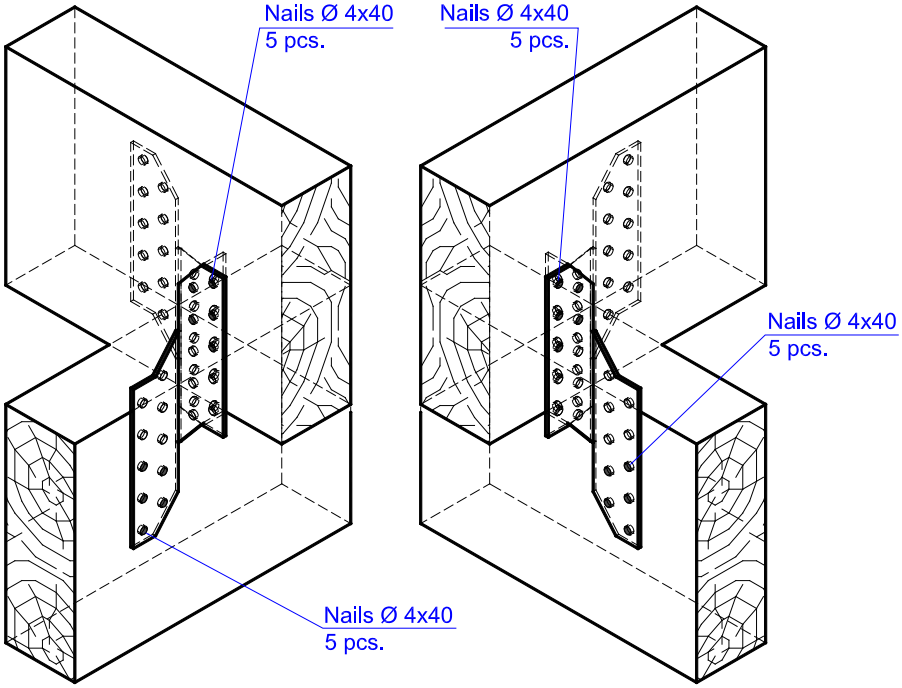

Figure A.4.1. Number and position of nails in the purlin ties GJ 170×2

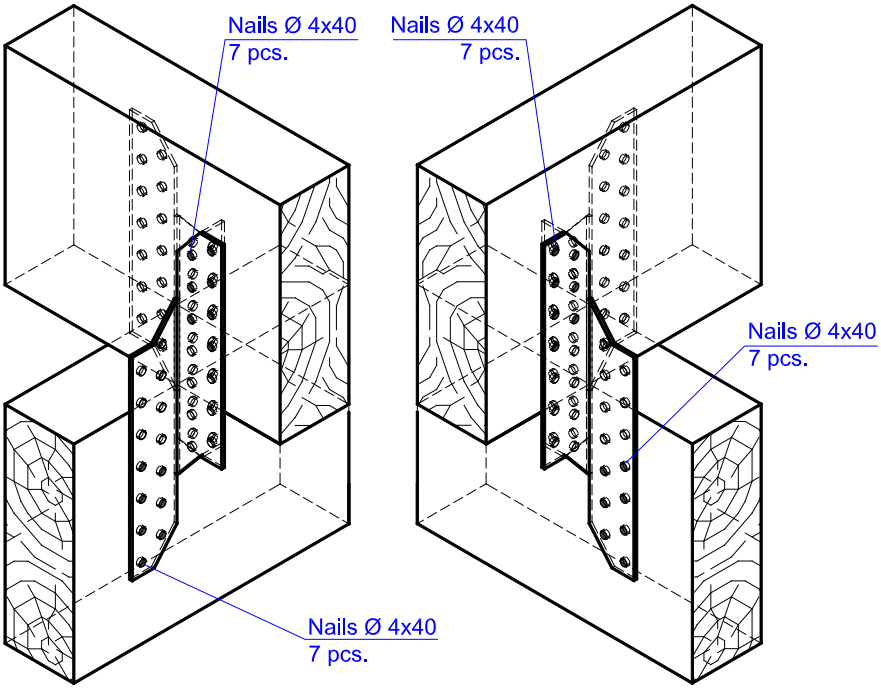

Figure A.4.2. Number and position of nails in the purlin ties GJ 210×2

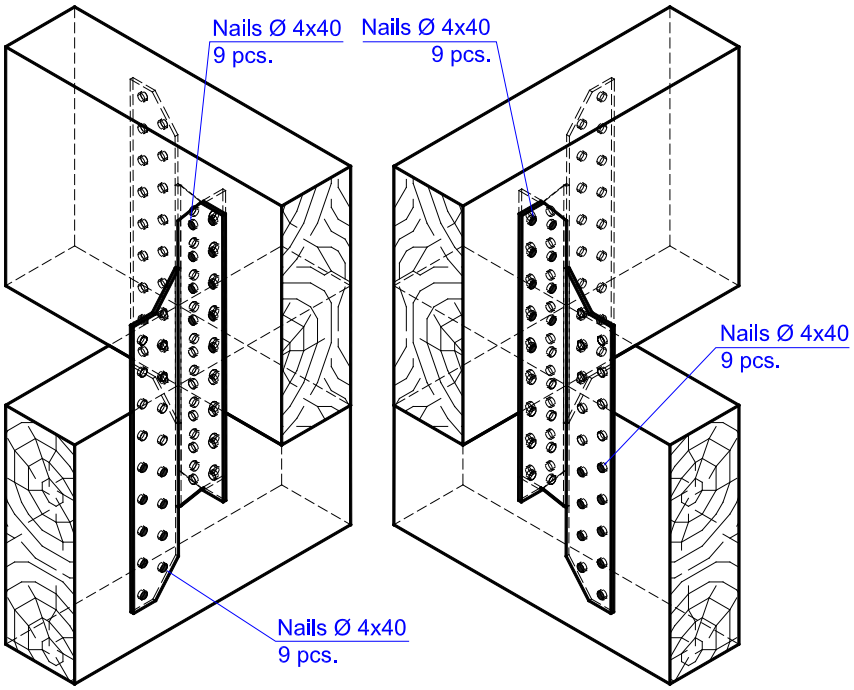

Figure A.4.3. Number and position of nails in the purlin ties GJ 250×2

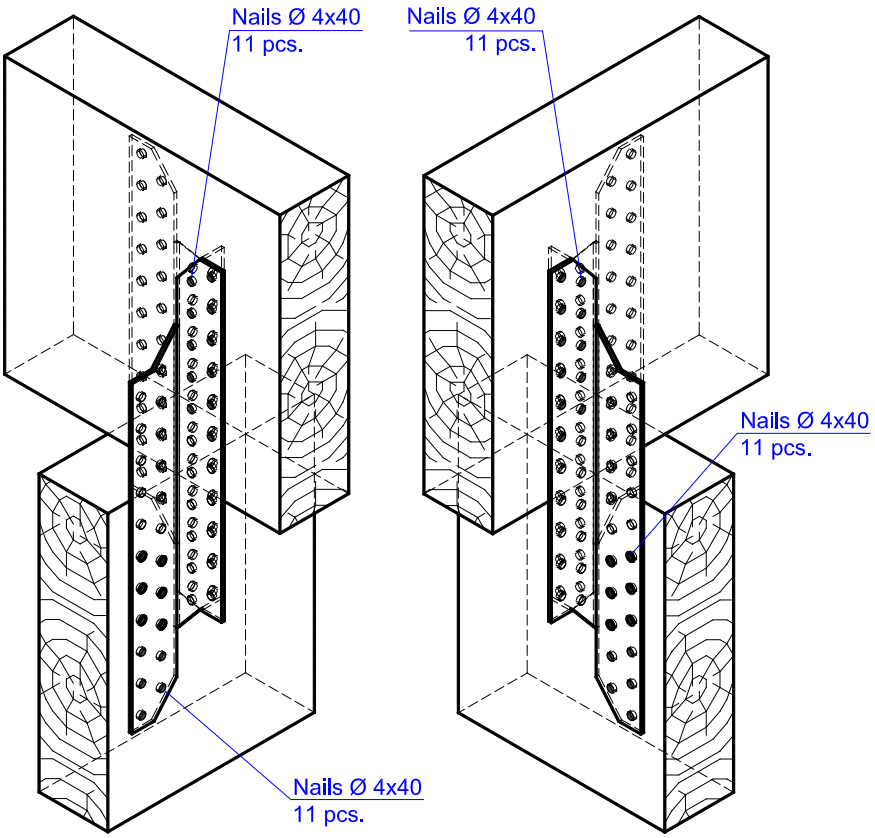

Figure A.4.4. Number and position of nails in the purlin ties GJ 290×2

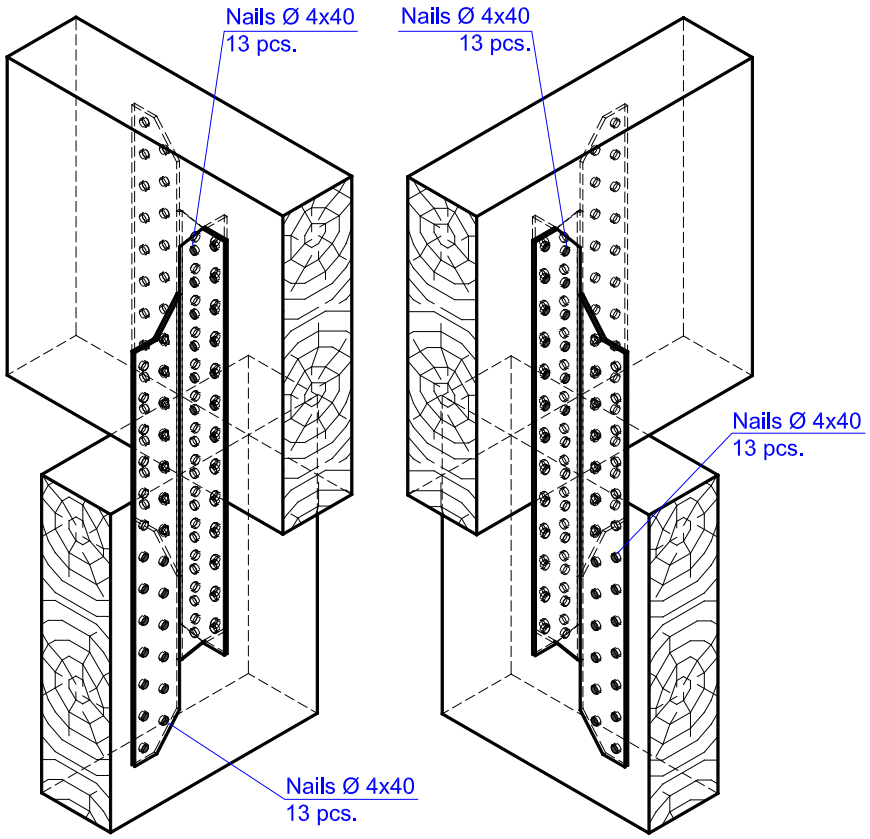

Figure A.4.5. Number and position of nails in the purlin ties GJ 330×2

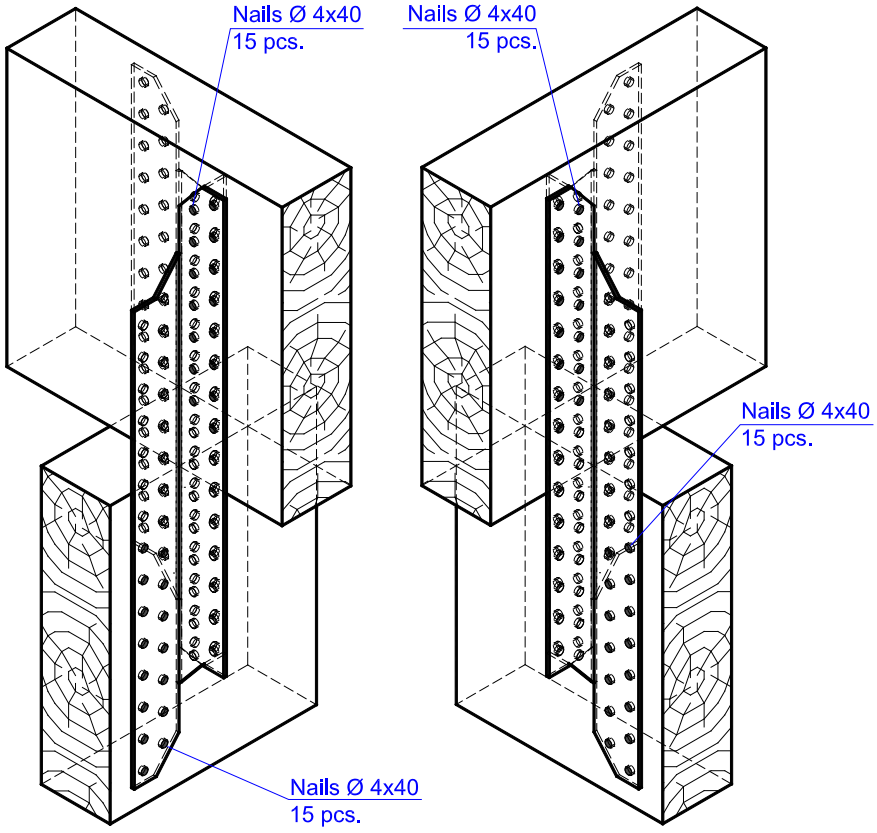

Figure A.4.6. Number and position of nails in the purlin ties GJ 370×2