STATYBOS PRODUKCIJOS SERTIFIKAVIMO CENTRAS
Saulėtekio al. 3, LT-10257 Vilnius, Lithuania
Tel +370 5 2728077, centras@spsc.lt,
www.spsc.lt

Designated according to Article 29 of Regulation (EU) 305/2011

Member of EOTA
www.eota.eu

European Technical Assessment

ETA-15/0446 of 2026-08-18

General Part

Technical Assessment Body issuing the European Technical Assessment:

Statybos produkcijos sertifikavimo centras

Trade name of the construction product	**Angle brackets, types MK, MKN** **Angle brackets with a rib, types MKS, MKNS**
Product family to which the above construction product belongs	**Product area code: 13** **Three-dimensional nailing plates** **Angle brackets for timber to timber connections**
Manufacturer	**UAB "Ardetas"** **Žirmūnų g. 46-40, LT-09227 Vilnius** **Lithuania** www.ardetas.lt
Manufacturing plant	**UAB "Ardetas"** **Arnionių g. 60, LT-18170 Pabradė,** **Švenčionių district, Lithuania**
This European Technical Assessment contains	**86 pages including 4 Annexes which form an integral part of this assessment.** **Annex – Control plan contain confidential information and is not included in the European Technical Assessment when that assessment is publicly disseminated**
This European Technical Assessment is issued in accordance with Article 95(4) of Regulation (EU) 2024/3110, on the basis of	**EAD 130186-00-0603** **Three dimensional nailing plates**
This version replaces	**ETA-15/0446 issued on 6 August 2015**

Translations of this European Technical Assessment in other languages shall fully correspond to the original issued document and should be identified as such.

Communication of this European Technical Assessment, including transmission by electronic means, shall be in full (excepted the confidential Annex(es) referred to above). However, partial reproduction may be made, with the written consent of the issuing Technical Assessment Body. Any partial reproduction has to be identified as such.

Specific Parts

1. Technical description of the product

Angle brackets types MK, MKN and Angle brackets with a rib, types MKS, MKNS given in ANNEX 2 are one-piece non-welded face fixed angle brackets to be used in timber to timber connections.

Angle brackets are connected to construction members made of timber or wood-based products by ringed shank nails.

The angle brackets are made from hot-dip zinc coated steel DX51D+Z275 according to standard EN 10346:2015[1] with minimum yield strength R_e of 250 MPa, minimum tensile strength R_m of 330 MPa and minimum elongation A_{80} of 22 %. The angle brackets are made from steel with normal thickness tolerances according to EN 10143:2006[2].

Product details and definitions are given in ANNEX 1..

Angle brackets form, dimensions, hole positions are shown in the ANNEX 2.

Characteristic load-carrying capacities of angle brackets are given in the ANNEX 3.

Number and positions of nails in the angle brackets are shown in the 0.

2. Specifications of the intended use in accordance with the applicable European Assessment Document (hereinafter EAD)

Intended use of the angle brackets are the connections between beams, beams and columns of load bearing timber structures, where the requirements for mechanical resistance, stability and safety in use in the sense of the Basic Requirements 1 and 4 of Regulation (EU) 2024/3110[3] of the European Parliament and of the Council of 27 November 2024 shall be fulfilled.

The wood members may be of solid timber or glued laminated timber with a characteristic density not greater than 500 kg/m³. This requirement for material of the wood members may be fulfilled by using the following materials:

- structural solid timber in accordance with EN 338:2016[4] / EN 14081-1:2005+A1:2011[5];
- structural finger jointed solid timber (softwood) in accordance with EN 15497:2014[6];
- glued laminated timber in accordance with EN 14080:2013[7];
- glued solid timber in accordance with EN EN 14080:2013;
- cross laminated timber (softwood) in accordance with European Technical Assessment, arrangement of the nails only perpendicular to the lateral face;
- laminated veneer lumber LVL (softwood) in accordance with EN 14374:2004[8], arrangement of the nails only perpendicular to the plane of the veneers;
- plywood (softwood) in accordance with standard EN 636:2012+A1:2015[9] and EN 13986:2004+A1:2015 [10], arrangement of the nails only perpendicular to the plane of the plies.

---

[1] EN 10346:2015 Continuously hot-dip coated steel flat products for cold forming - Technical delivery conditions.

[2] EN 10143:2006 Continuously hot-dip coated steel sheet and strip - Tolerances on dimensions and shape.

[3] Regulation (EU) 2024/3110 of the European Parliament and of the Council of 27 November 2024 laying down harmonised rules for the marketing of construction products and repealing Regulation (EU) No 305/2011.

[4] EN 338:2016Structural timber - Strength classes.

[5] EN 14081-1:2005+A1:2011 Timber structures - Strength graded structural timber with rectangular cross section - Part 1: General requirements.

[6] EN 15497:2014 Structural finger jointed solid timber - Performance requirements and minimum production requirements

[7] EN 14080:2013 Timber structures - Glued laminated timber and glued solid timber – Requirements.

[8] EN 14374:2004 Timber structures - Structural laminated veneer lumber – Requirements.

[9] EN 636:2012+A1:2015 Plywood - Specifications.

The static and kinematic behaviour of the timber members or the supports shall be as described in ANNEX 3.

ANNEX 3 states the load-carrying capacities of the angle brackets connections for a characteristic density of 350 kg/m³. For other timber densities, the value of $F_{1.k}$ shall be adjusted accordingly.

The load-bearing capacity calculations of the connection were carried out in accordance with the requirements of standards:

- EN 1995-1-1:2004 Eurocode 5: Design of timber structures - Part 1-1: General - Common rules and rules for buildings;

The scope of the angle brackets regarding resistance to corrosion shall be defined according to national provisions that apply at the installation site considering environmental conditions and in conjunction with the admissible service conditions according to Eurocode EN 1995-1-1 and the admissible corrosivity category as described and defined in standard EN ISO 12944-2.

The verifications and assessment methods on which this European Technical Assessment is based lead to the assumption of a working life of the angle brackets of at least 50 years.

The indications given on the working life cannot be interpreted as a guarantee given by the producer, but are to be regarded only as a means for choosing the right products in relation to the expected economically reasonable working life of the works.

[10] EN 13986:2004+A1:2015 Wood-based panels for use in construction - Characteristics, evaluation of conformity and marking.

3. Performance of the product and references to the methods used for its assessment

3.1. Structural integrity of construction works (BWR 1)

Essential characteristic	Performance
Joint strength	See Annex 3
Joint stiffness	No performance assessed
Joint ductility	No performance assessed
Resistance to seismic actions	No performance assessed
Resistance to corrosion and deterioration	Hot-dip zinc-coated steel Z275 according to EN 10346

3.2. Fire safety of construction works (BWR 2)

Essential characteristic	Performance
Reaction to fire	Class A1
Resistance to fire	No performance assessed

The angle brackets are made from steel classified as Euroclass A1 in accordance with EN 13501-1:2007+A1:2009[11] and EC decision 96/603/EC[12], amended by EC Decision 2000/605/EC[13]

3.3. Protection against adverse hygiene and health impacts related to construction works (BWR 3)

Essential characteristic	Performance
Release of dangerous substances	No performance assessed

3.4. Methods of verification

Safety principles and partial factors

The characteristic load-carrying capacities are based on the characteristic values of the dowel-type connections and the steel plates. To obtain design values the capacities must be divided by different partial factors for the material properties, in case of failure of connections between the angle bracket or hold down to a timber member in addition multiplied with the coefficient k_{mod}.

The characteristic load-carrying capacity of the connection is given in the tables, whereas the design load-bearing capacity $F_{1.d}$ shall be calculated as follows:

$$F_{1.d} = \frac{F_{1.k} \cdot k_{\mathrm{mod}}}{\gamma_M}$$

where:

$F_{1.t.k}$; $F_{1.s.k}$ – characteristic load-bearing capacity of timber or steel failure;

11 EN 13501-1:2018 Fire classification of construction products and building elements - Part 1: Classification using data from reaction to fire tests EN 13501-1:2018.

12 OJ L 267, 19.10.1996, p. 23.

13 OJ L 258, 12.10.2000, p. 36

k_{mod} – modification factor taking into account the effects of load duration and moisture content. The fasteners are intended for use in timber structures under dry indoor conditions, defined as service classes 1 and 2 in accordance with EN 1995-1-1, and for connections subjected to permanent or quasi-permanent loads;

γ_M – partial factor for a material property.

Threaded nails are used for fastening the steel components to timber.

The minimum edge distances and end distances of the timber members shall comply with the requirements of EN 1995-1-1.

3.5. Mechanical resistance and stability

Annex 2 states the load-carrying capacities of the angle brackets connections for a characteristic density of 350 kg/m³ of wood based structural members. For other timber densities, the value of $F_{1.k}$ shall be adjusted accordingly.

For joints shall be used threaded nails according to EN 14592:2008+A1:2012[14] with diameter 4,0 mm. Threaded nails types may be used with values of axial characteristic load-carrying capacity $f_{ax,k}$ per nail not less than 7,8 MPa, and with the characteristic fastener yield moment – $M_{y,Rk}$ *equal to or greater than 7168 Nmm.*

The characteristic capacities of the angle brackets are determined by calculation as described in the EAD 130186-00-0603. They should be used for designs in accordance with Eurocode 5 or a similar national Timber Code.

The wood members shall have the thickness which is larger than the penetration depth of the nails into the members.

No performance has been determined in relation to the joint's stiffness properties - to be used for the analysis of the serviceability limit state

No performance has been assessed in relation to ductility of a joint under cyclic testing. The contribution to the performance of structures in seismic zones, therefore, has not been assessed.

3.6. Aspects related to the performance of the product

Corrosion protection in service class 1 and 2

In accordance with EAD 130186-00-0603 the joist hangers have a hot-dip zinc coating weight Z275 (275 g/m^2 on both surfaces). The steel employed is DX51D + Z275 according to standard EN 10346:2015 with $R_e \geq 250$ N/mm², $R_m \geq 330$ N/mm² and $A_{80} \geq 22\%$.

The angle brackets are primarily intended for use in timber structures subject to the dry, internal conditions defined by service class 1 and 2 of Eurocode 5 and for connections subject to static or quasi-static loading. The angle brackets can also be used in outdoor structures, defined by service class 3, when a corrosion protection in accordance with Eurocode 5 is applied, or when stainless steel with similar or better characteristic yield, ultimate strength and ductility is employed.

3.7. General aspects related to the use of the product

A connector – three-dimensional nailing plates is deemed fit for its intended use provided:

- joints are designed in accordance with Eurocode 5 or an appropriate national regulation for timber constructions design under the responsibility of an engineer experienced in timber structures;
- the structural members to which the three-dimensional nailing plates are fixed shall be restrained against rotation;
- the structural members of solid timber shall be of strength class C14 or better;

[14] EN 14592:2008+A1:2012 Timber structures - Dowel-type fasteners – Requirements

- the structural members of glulam shall be of strength class GL24 or better;
- the structural timber members shall be free from wane under the angle brackets;
- the tensile strength perpendicular to the grain capacity of the timber member to be used in conjunction with the angle brackets is to be checked by the designer of the structure to ensure that it is not less than the angle brackets capacity and, if necessary, the angle brackets capacity shall be reduced accordingly;
- for cross laminated timber, LVL and plywood the arrangement of the nails shall be only perpendicular to the lateral face or plane of the veneers;
- the gap between the timber members does not exceed 3 mm;
- there are no specific requirements relating to preparation of the timber members.

The fitness for use of the joint can be assumed if the connector is installed correctly in accordance with the following requirements:

- installation is carried out by personnel under the direction of supervisors, which are appropriately qualified for this work;
- installation is in accordance with the manufacturer's specifications and drawings prepared for that purpose, and the appropriate tools are used;
- the specified fasteners are used.

4. Assessment and verification of constancy of performance (AVPC) system applied, with reference to its legal base

In accordance with European Assessment Document EAD No. 130186-00-0603 the applicable European legal act is: 97/638/EC.

The system to be applied is: 2+.

5. Technical details necessary for the implementation of the AVCP system, as provided for in the applicable EAD

Technical details necessary for the implementation of the AVCP system are laid down in the control plan deposited at Statybos produkcijos sertifikavimo centras (SPSC) prior to CE marking.

5.1. Responsibility of the manufacturer

It is the responsibility of the manufacturer to ensure that the information on the specific conditions given in this European technical assessment, is given to those concerned. This information may be made by replicating the respective parts of this European Technical Assessment. In addition, all installation data shall be shown clearly on the package and / or on an instruction sheet, preferably using illustration(s).

5.2. Recommendations on packaging, transport and storage

The joist hangers are packed in boxes bearing the manufacturer's name, product type, dimensions, quantity, date of fabrication and batch reference details.

In relation to transportation and storage, the connectors should be treated as conventional metallic building products.

Issued in Vilnius on 2026-08-18
by
Statybos produkcijos sertifikavimo centras (SPSC)



Director
Valdemaras Gauronskis

ANNEX 1. Product details and definitions

Table A.1.1. Angle bracket type, overall dimensions, steel and coating specification.

Angle bracket type		Steel thickness (mm)	Steel and coating specification [1)]
Isosceles Angle brackets			
MK	60×60×40×2,0	2,0	EN 10346 - DX51D + Z275
MK	80×80×40×2,0	2,0	EN 10346 - DX51D + Z275
MK	60×60×60×2,0	2,0	EN 10346 - DX51D + Z275
MK	80×80×60×2,0	2,0	EN 10346 - DX51D + Z275
MK	100×100×60×2,0	2,0	EN 10346 - DX51D + Z275
MK	60×60×80×2,0	2,0	EN 10346 - DX51D + Z275
MK	80×80×80×2,0	2,0	EN 10346 - DX51D + Z275
MK	100×100×80×2,0	2,0	EN 10346 - DX51D + Z275
MK	60×60×100×2,0	2,0	EN 10346 - DX51D + Z275
MK	80×80×100×2,0	2,0	EN 10346 - DX51D + Z275
MK	100×100×100×2,0	2,0	EN 10346 - DX51D + Z275
MK	60×60×40×2,5	2,5	EN 10346 - DX51D + Z275
MK	80×80×40×2,5	2,5	EN 10346 - DX51D + Z275
MK	60×60×60×2,5	2,5	EN 10346 - DX51D + Z275
MK	80×80×60×2,5	2,5	EN 10346 - DX51D + Z275
MK	100×100×60×2,5	2,5	EN 10346 - DX51D + Z275
MK	60×60×80×2,5	2,5	EN 10346 - DX51D + Z275
MK	80×80×80×2,5	2,5	EN 10346 - DX51D + Z275
MK	100×100×80×2,5	2,5	EN 10346 - DX51D + Z275
MK	60×60×100×2,5	2,5	EN 10346 - DX51D + Z275
MK	80×80×100×2,5	2,5	EN 10346 - DX51D + Z275
MK	100×100×100×2,5	2,5	EN 10346 - DX51D + Z275

[1)] requirements according angle brackets manufacturer‘s UAB “Ardetas” documentation:
- minimum yield strength, $R_{po,2}$ or R_{eL} – 250 MPa;
- minimum tensile strength, R_m – 330 MPa;
- minimum elongation, A_{80} – 22 % (according requirements of EN 10346:2015)

Table A.1.1. (continued)

Angle bracket type		Steel thickness (mm)	Steel and coating specification [1)]
Isosceles Angle brackets with additional holes			
MK	50×50×35×2,0	2,0	EN 10346 - DX51D + Z275
MK	50×50×35×2,5	2,5	EN 10346 - DX51D + Z275
MK	50×50×50×2,0	2,0	EN 10346 - DX51D + Z275
MK	60×60×50×2,0	2,0	EN 10346 - DX51D + Z275
MK	60×60×50×2,5	2,5	EN 10346 - DX51D + Z275
MK	70×70×55×2,0	2,0	EN 10346 - DX51D + Z275
MK	70×70×55×2,5	2,5	EN 10346 - DX51D + Z275
MK	90×90×40×2,0	2,0	EN 10346 - DX51D + Z275
MK	90×90×40×2,5	2,5	EN 10346 - DX51D + Z275
MK	90×90×40×3,0	3,0	EN 10346 - DX51D + Z275
MK	90×90×65×2,0	2,0	EN 10346 - DX51D + Z275
MK	90×90×65×2,5	2,5	EN 10346 - DX51D + Z275
MK	100×100×90×2,0	2,0	EN 10346 - DX51D + Z275
MK	100×100 ×90×2,5	2,5	EN 10346 - DX51D + Z275
MK	105×105×90×3,0	3,0	EN 10346 - DX51D + Z275
Isosceles Angle brackets with a rib			
MKS	50×50×35×2,0	2,0	EN 10346 - DX51D + Z275
MKS	50×50×35×2,5	2,5	EN 10346 - DX51D + Z275
MKS	50×50×50×2,0	2,0	EN 10346 - DX51D + Z275
MKS	50×50×50×2,5	2,5	EN 10346 - DX51D + Z275
MKS	60×60×50×2,0	2,0	EN 10346 - DX51D + Z275
MKS	60×60×50×2,5	2,5	EN 10346 - DX51D + Z275
MKS	70×70×55×2,0	2,0	EN 10346 - DX51D + Z275
MKS	70×70×55×2,5	2,5	EN 10346 - DX51D + Z275
MKS	70×70×65×2,0	2,0	EN 10346 - DX51D + Z275
MKS	90×90×50×2,0	2,0	EN 10346 - DX51D + Z275
MKS	90×90×50×2,5	2,5	EN 10346 - DX51D + Z275
MKS	90×90×65×2,0	2,0	EN 10346 - DX51D + Z275
MKS	90×90×65×2,5	2,5	EN 10346 - DX51D + Z275
MKS	100×100×90×2,0	2,0	EN 10346 - DX51D + Z275
MKS	100×100×90×2,5	2,5	EN 10346 - DX51D + Z275
MKS	105×105×90×3,0	3,0	EN 10346 - DX51D + Z275

[1)] requirements according angle brackets manufacturer‘s UAB “Ardetas” documentation:
- minimum yield strength, $R_{po,2}$ or R_{eL} – 250 MPa;
- minimum tensile strength, R_m – 330 MPa;
- minimum elongation, A_{80} – 22 % (according requirements of EN 10346:2015)

Table A.1.1. (continued)

Angle bracket type		Steel thickness (mm)	Steel and coating specification [1)]
Non-isosceles Angle brackets with a rib			
MKNS	90×50×50×2,0	2,0	EN 10346 - DX51D + Z275
MKNS	90×50×50×2,5	2,5	EN 10346 - DX51D + Z275
MKNS	150×90×65×2,0	2,0	EN 10346 - DX51D + Z275
MKNS	150×90×65×2,5	2,5	EN 10346 - DX51D + Z275
MKNS	150×100×90×2,0	2,0	EN 10346 - DX51D + Z275
MKNS	150×100×90×2,5	2,5	EN 10346 - DX51D + Z275
Non-isosceles Angle brackets			
MKN	120×40×40×2,0	2,0	EN 10346 - DX51D + Z275
MKN	80×40×40×2,0	2,0	EN 10346 - DX51D + Z275
MKN	120×40×60×2,0	2,0	EN 10346 - DX51D + Z275
MKN	80×40×60×2,0	2,0	EN 10346 - DX51D + Z275
MKN	100×60×60×2,0	2,0	EN 10346 - DX51D + Z275
MKN	200×40×40×2,0	2,0	EN 10346 - DX51D + Z275
Non-isosceles Angle brackets with additional holes			
MKN	90×50×50×2,0	2,0	EN 10346 - DX51D + Z275
MKN	90×50×50×2,5	2,5	EN 10346 - DX51D + Z275
MKN	95×45×40×2,5	2,5	EN 10346 - DX51D + Z275
MKN	135×45×40×2,0	2,0	EN 10346 - DX51D + Z275
MKN	135×45×40×2,5	2,5	EN 10346 - DX51D + Z275

[1)] requirements according angle brackets manufacturer‘s UAB “Ardetas” documentation:
- minimum yield strength, $R_{po,2}$ or R_{eL} – 250 MPa;
- minimum tensile strength, R_m – 330 MPa;
- minimum elongation, A_{80} – 22 % (according requirements of EN 10346:2015)

ANNEX 2. Angle brackets form, dimensions, hole positions

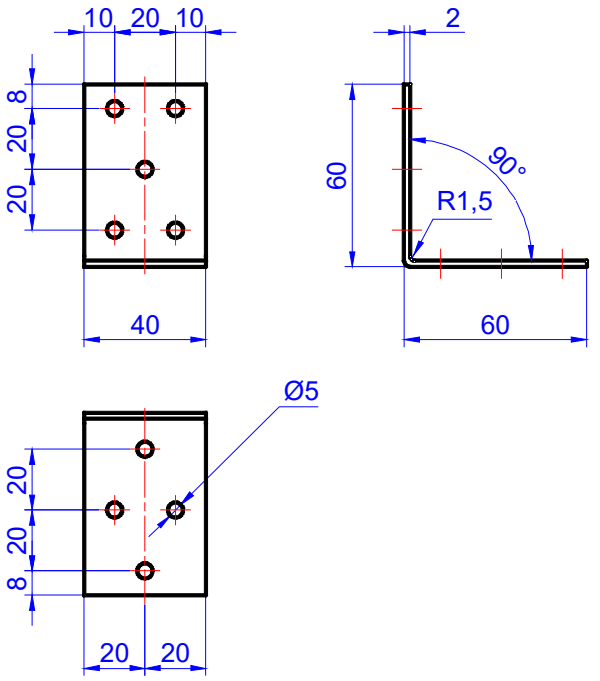

Figure A.2.1. Angle bracket MK 60×60×40×2,0

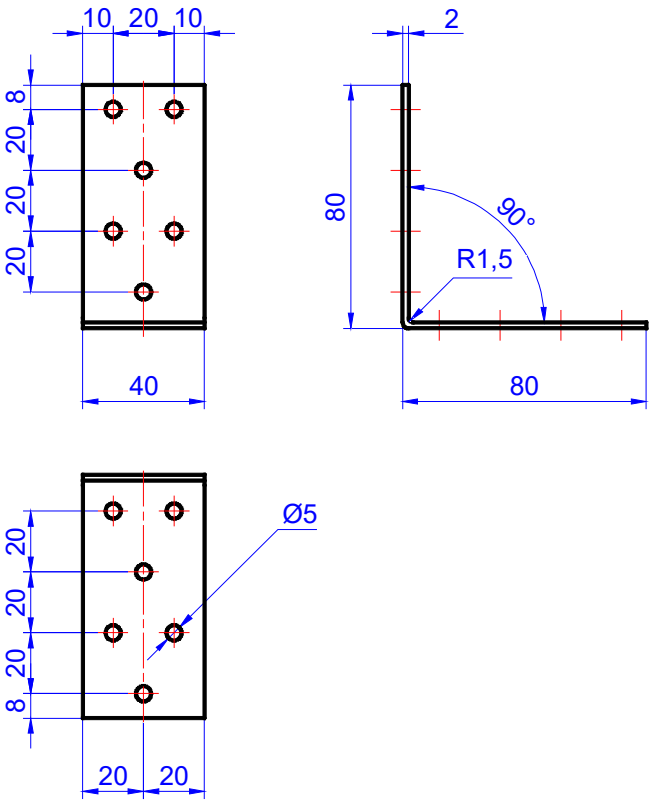

Figure A.2.2. Angle bracket MK 80×80×40×2,0

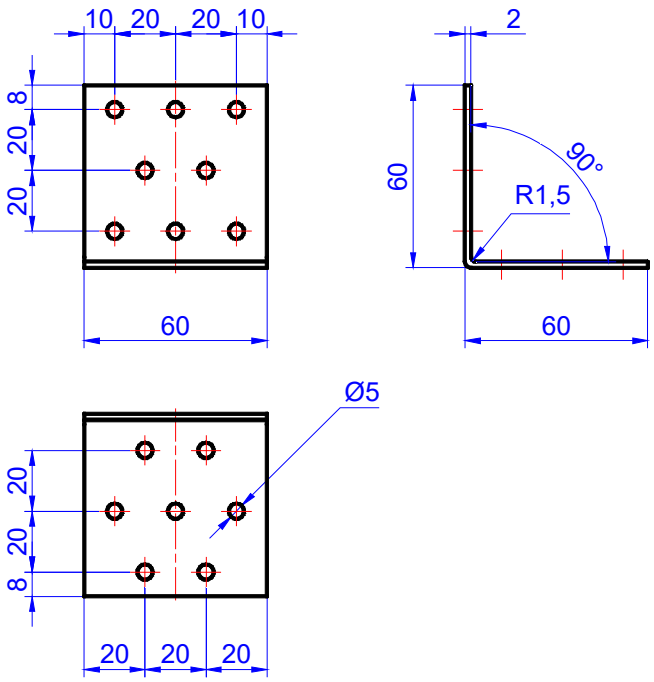

Figure A.2.3. Angle bracket MK 60×60×60×2,0

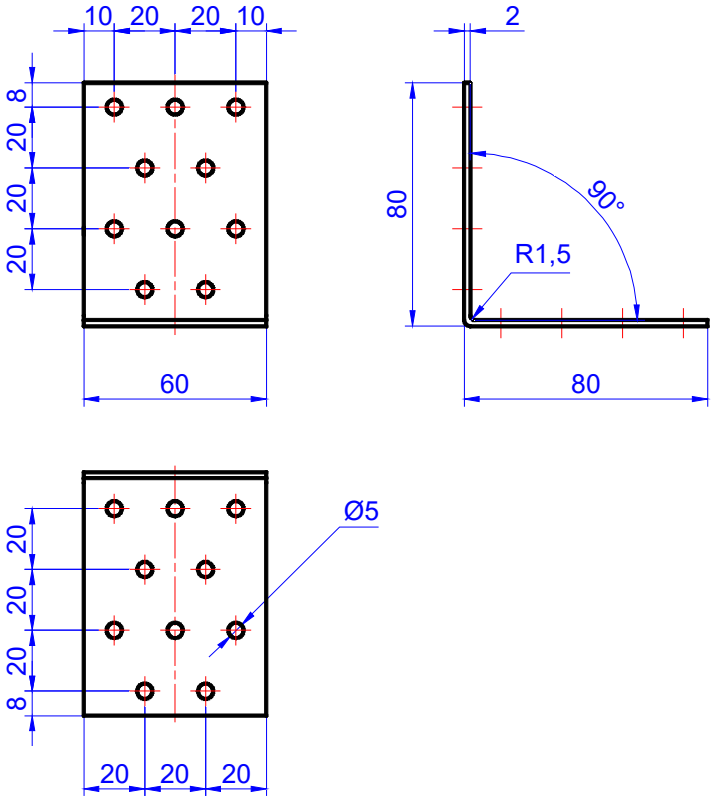

Figure A.2.4. Angle bracket MK 80×80×60×2,0

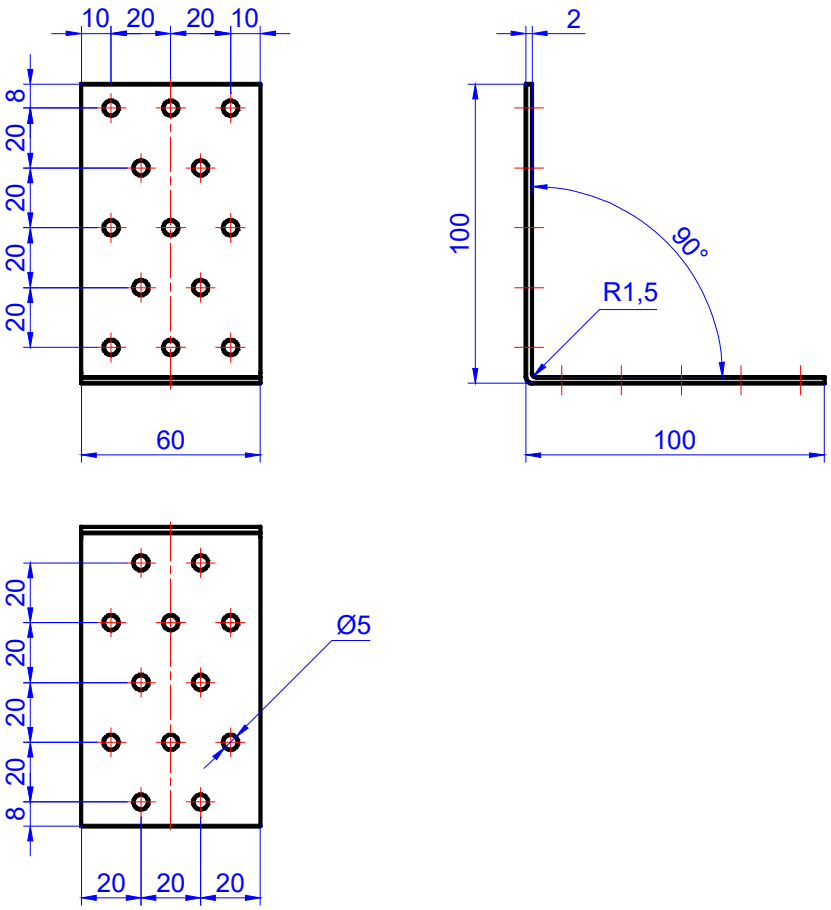

Figure A.2.5. Angle bracket MK 100×100×60×2,0

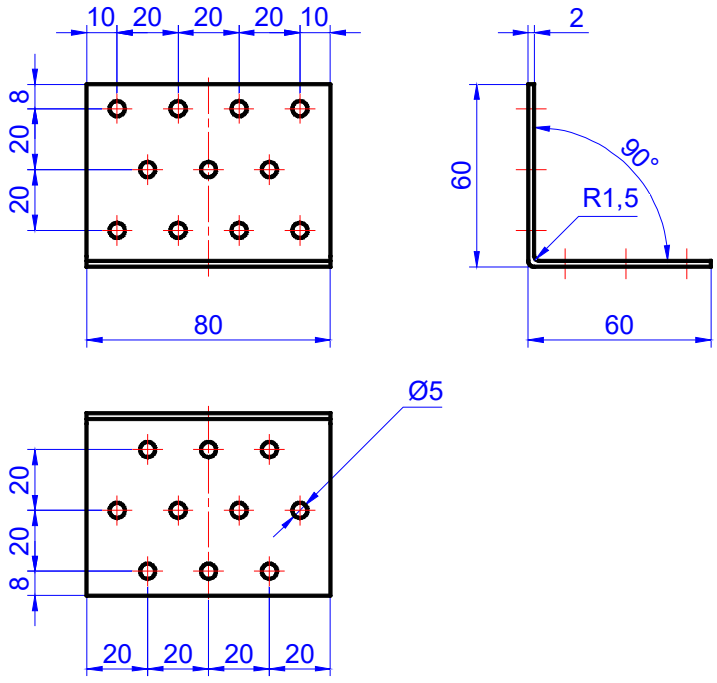

Figure A.2.6. Angle bracket MK 60×60×80×2,0

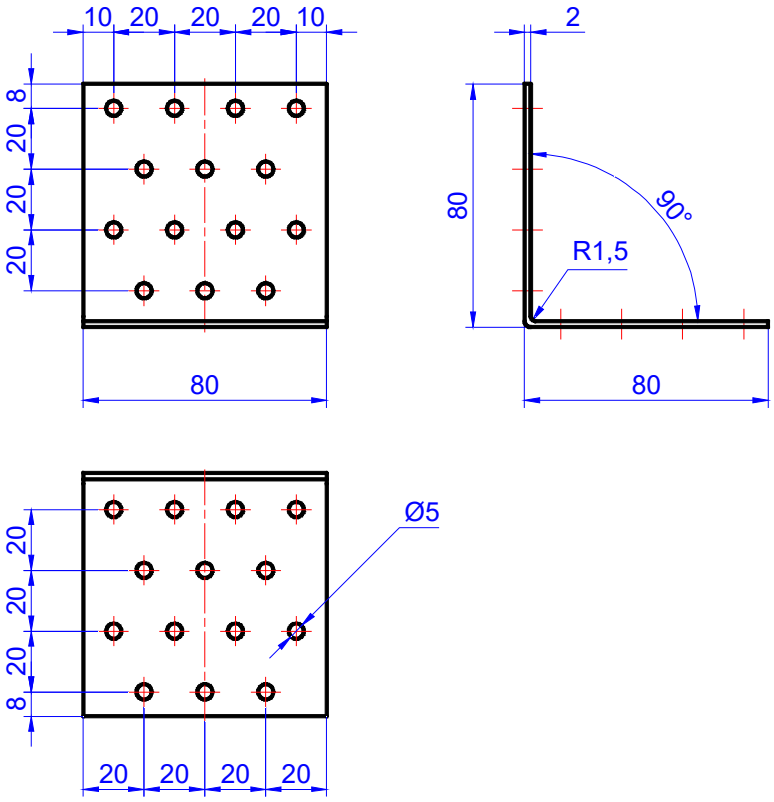

Figure A.2.7. Angle bracket MK 80×80×80×2,0

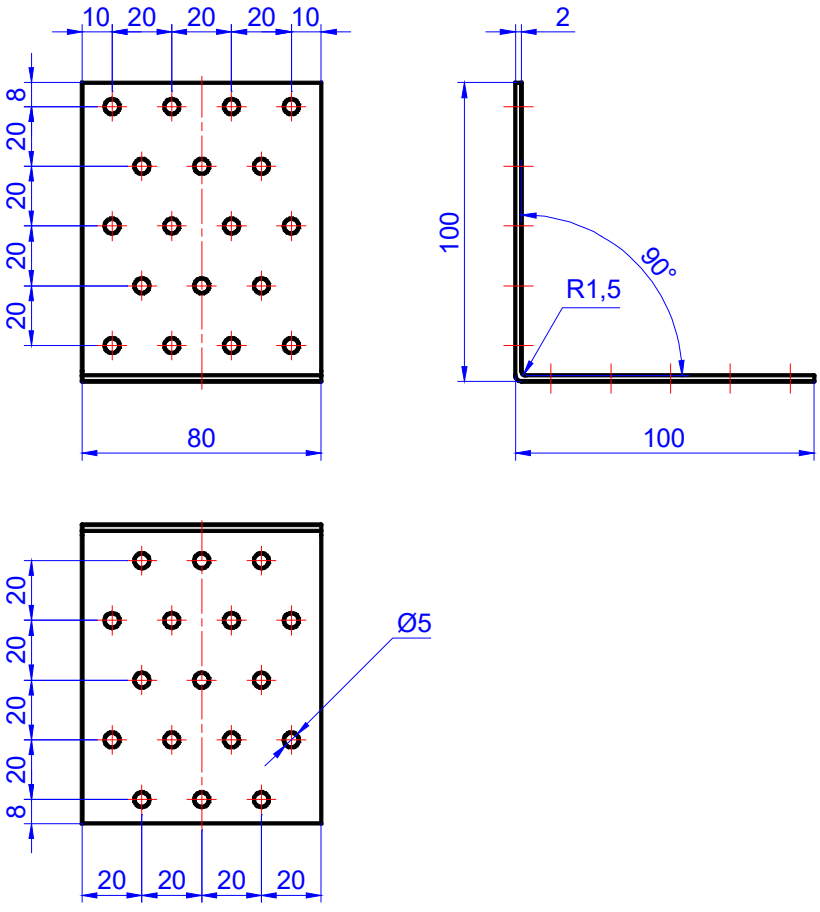

Figure A.2.8. Angle bracket MK 100×100×80×2,0

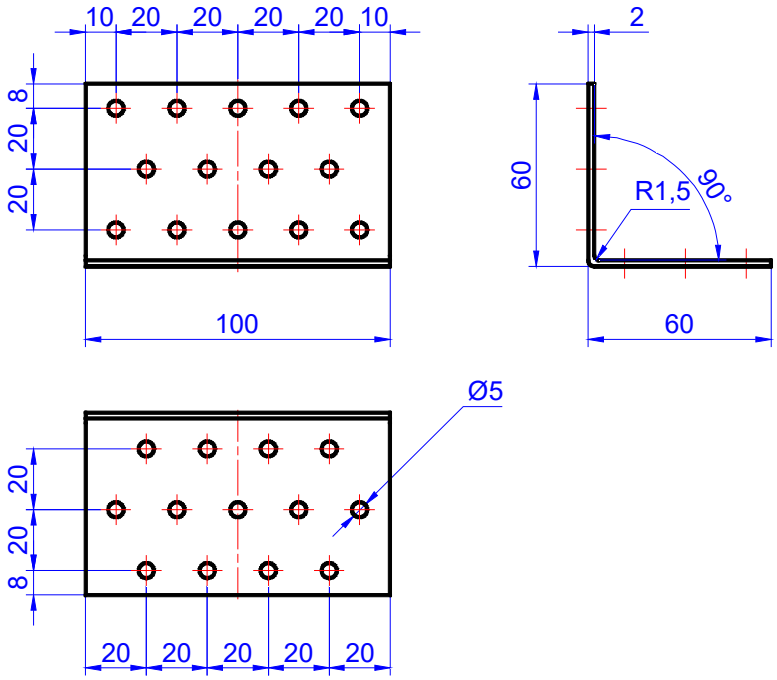

Figure A.2.9. Angle bracket MK 60×60×100×2,0

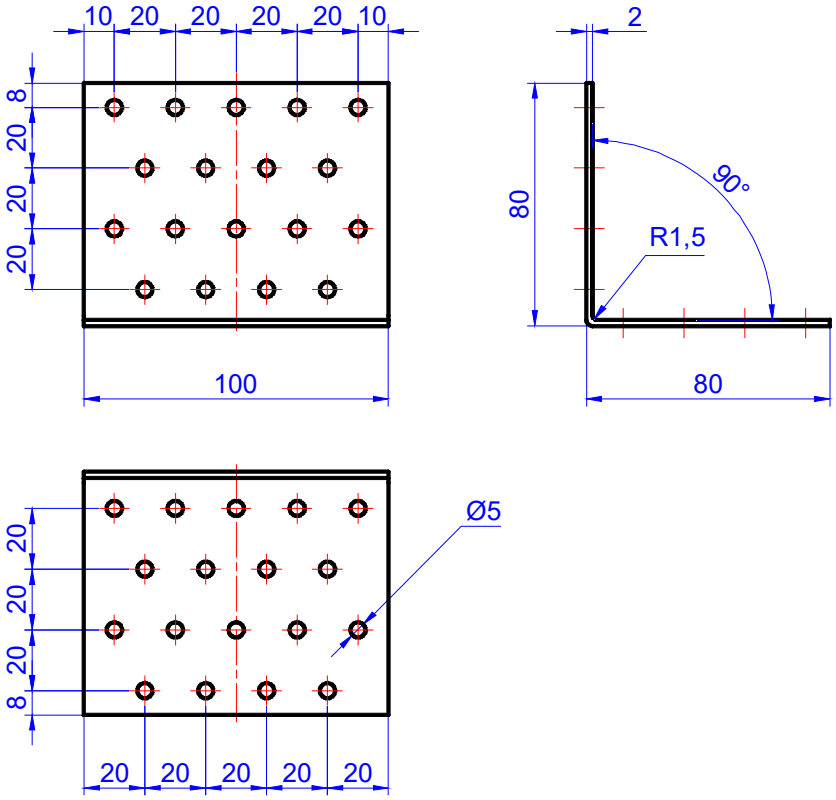

Figure A.2.10. Angle bracket MK 80 × 80 × 100 × 2,0

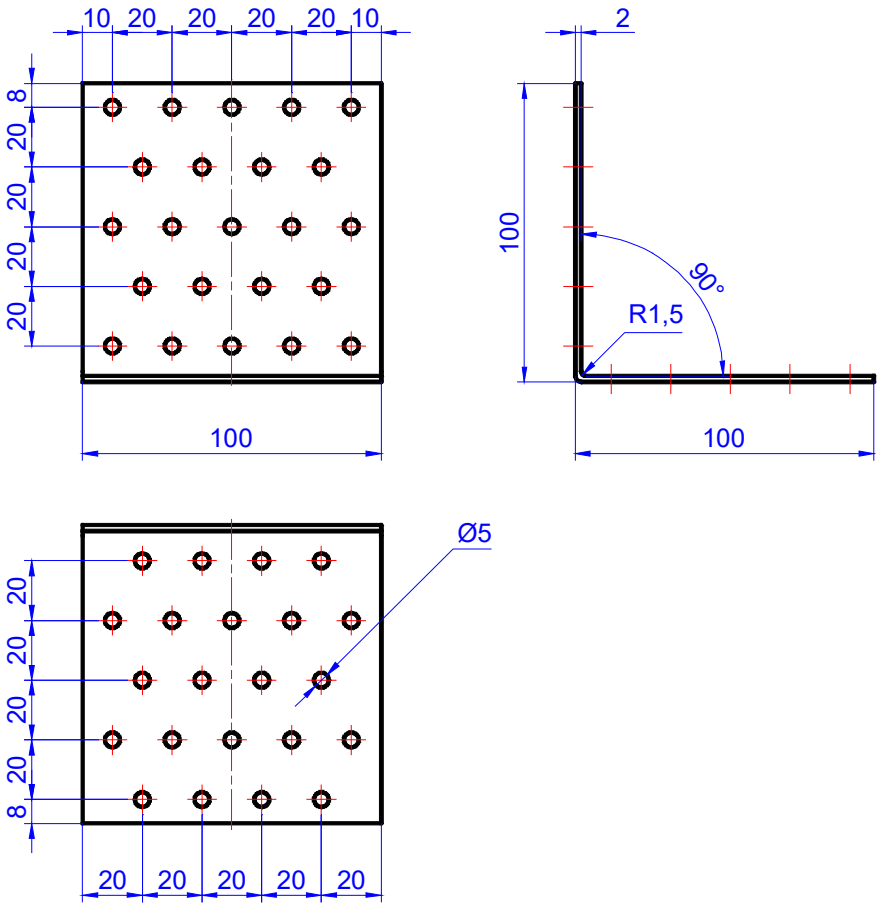

Figure A.2.11. Angle bracket MK 100×100×100×2,0

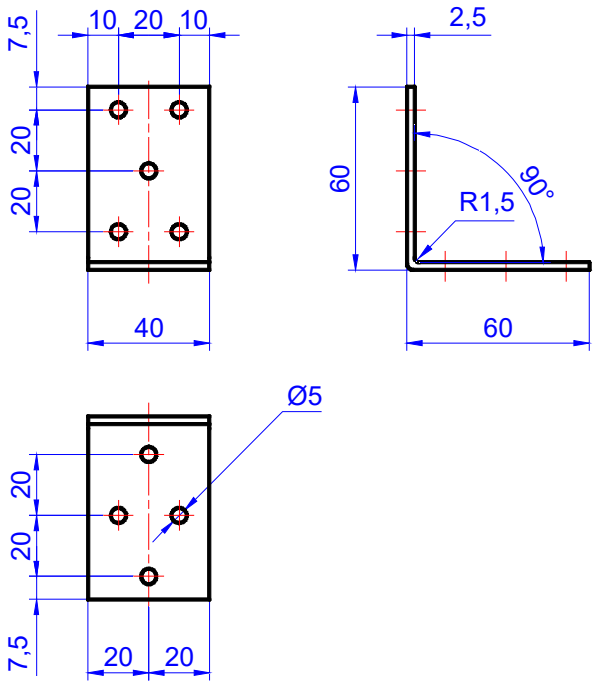

Figure A.2.12. Angle bracket MK 60×60×40×2,5

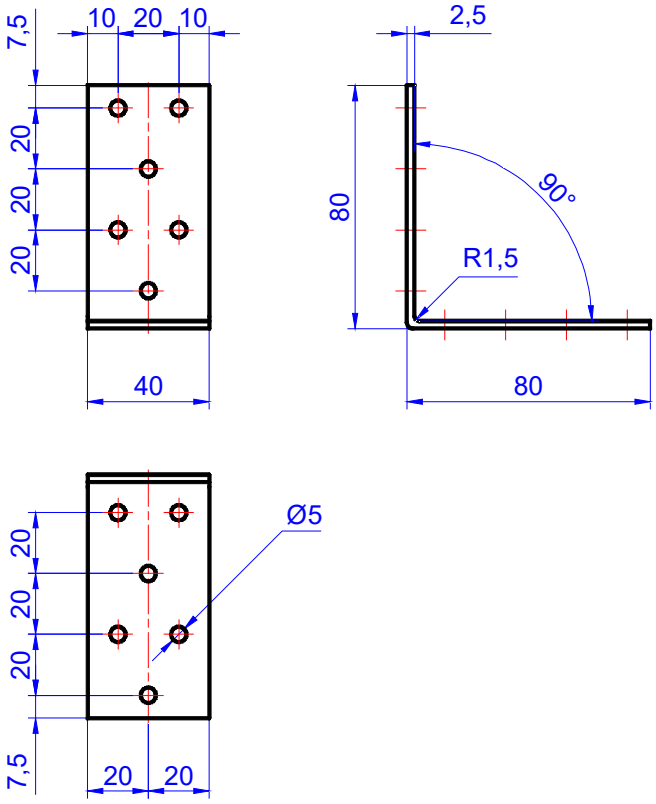

Figure A.2.13. Angle bracket MK 80×80×40×2,5

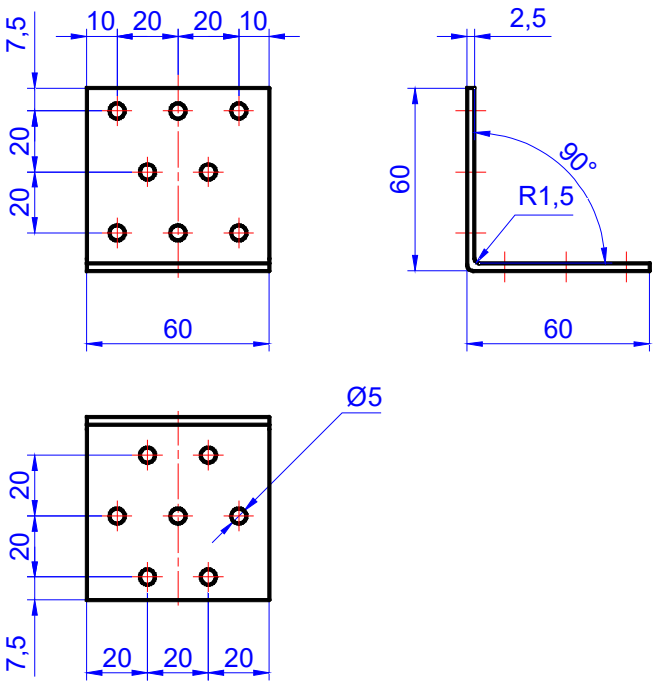

Figure A.2.14. Angle bracket MK 60×60×60×2,5

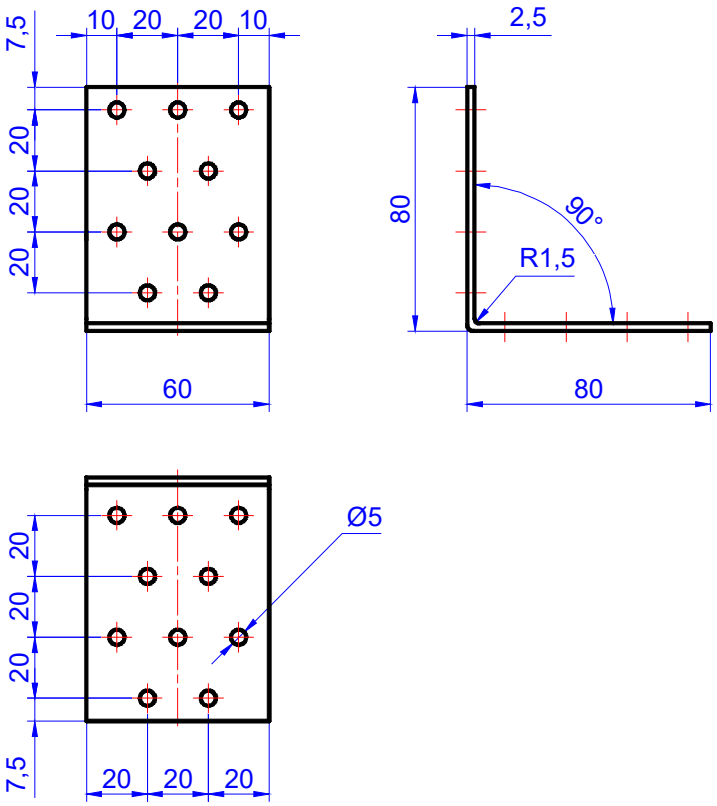

Figure A.2.15. Angle bracket MK 80×80×60×2,5

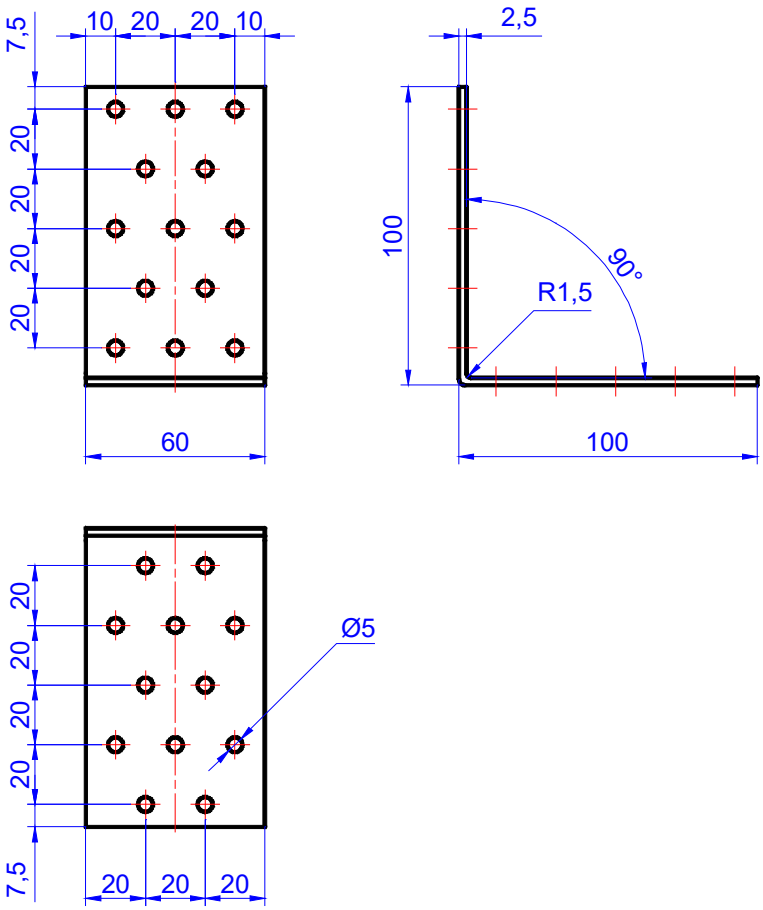

Figure A.2.16. Angle bracket MK 100×100×60×2,5

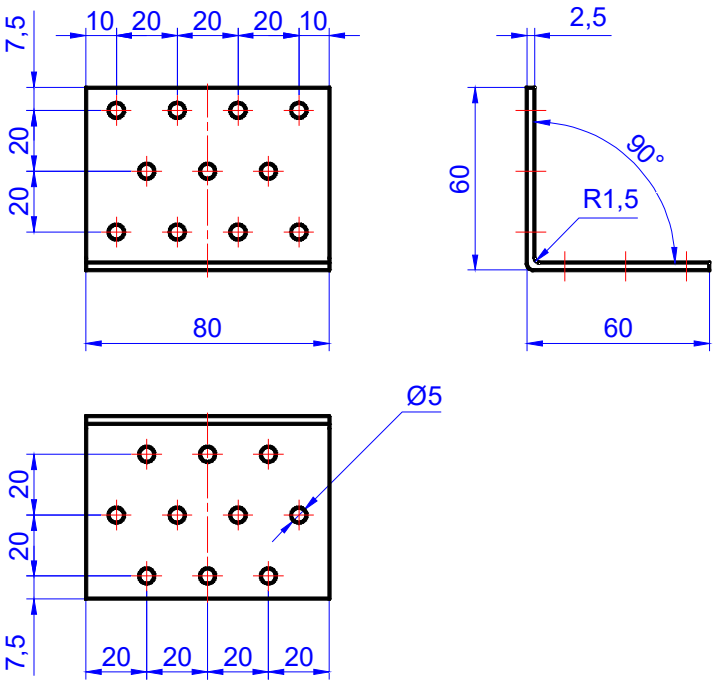

Figure A.2.17. Angle bracket MK 60×60×80×2,5

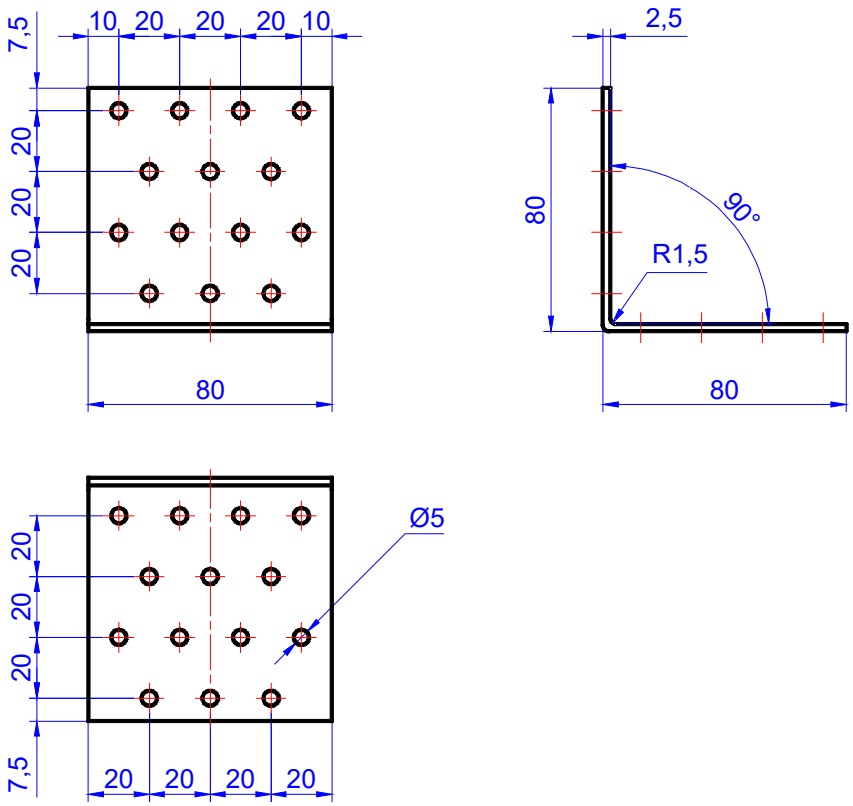

Figure A.2.18. Angle bracket MK 80×80×80×2,5

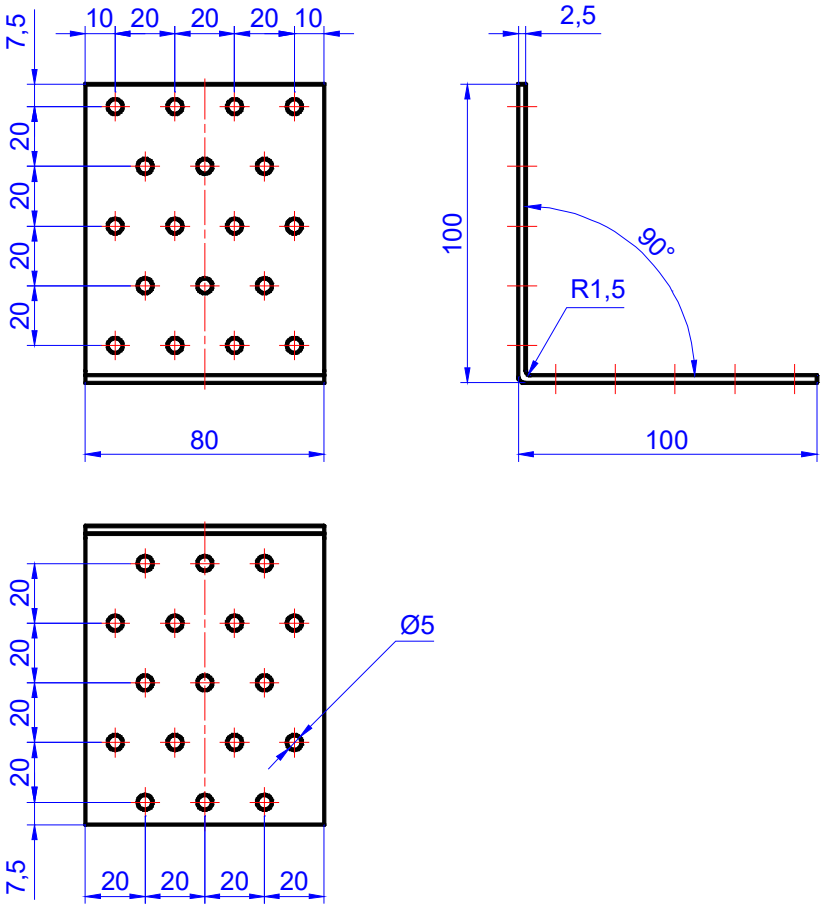

Figure A.2.19. Angle bracket MK 100×100×80×2,5

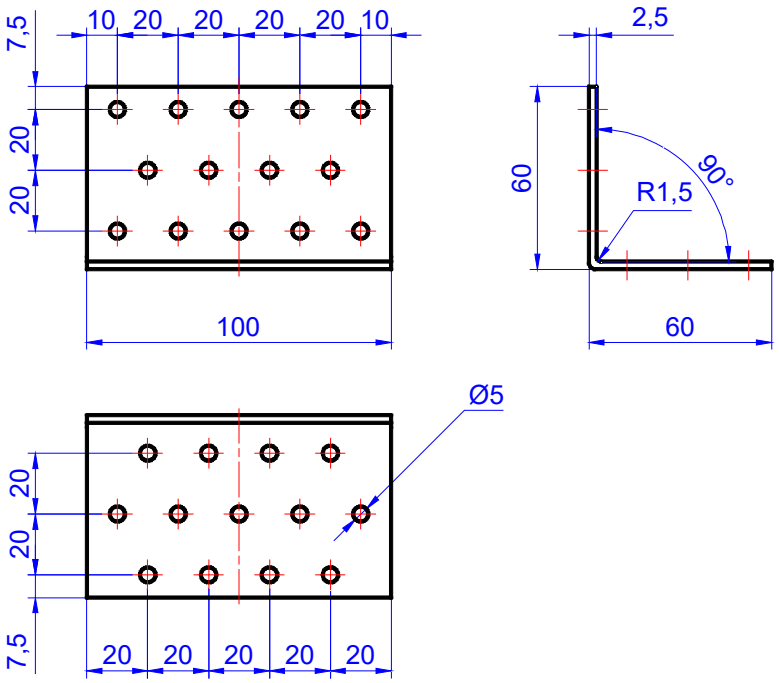

Figure A.2.20. Angle bracket MK 60×60×100×2,5

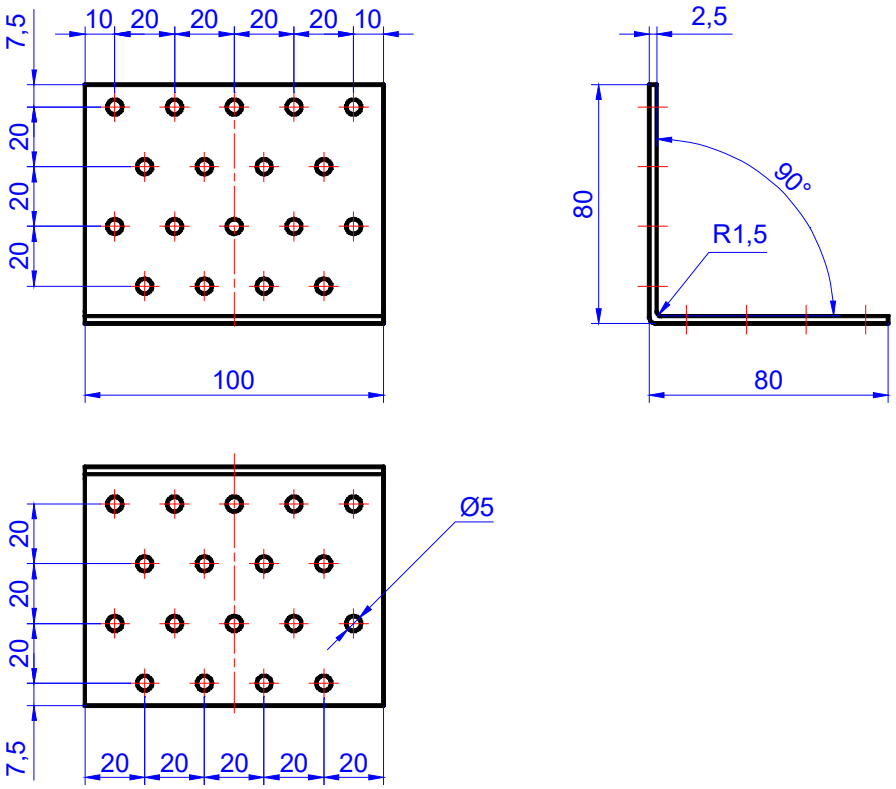

Figure A.2.21. Angle bracket MK 80×80×100×2,5

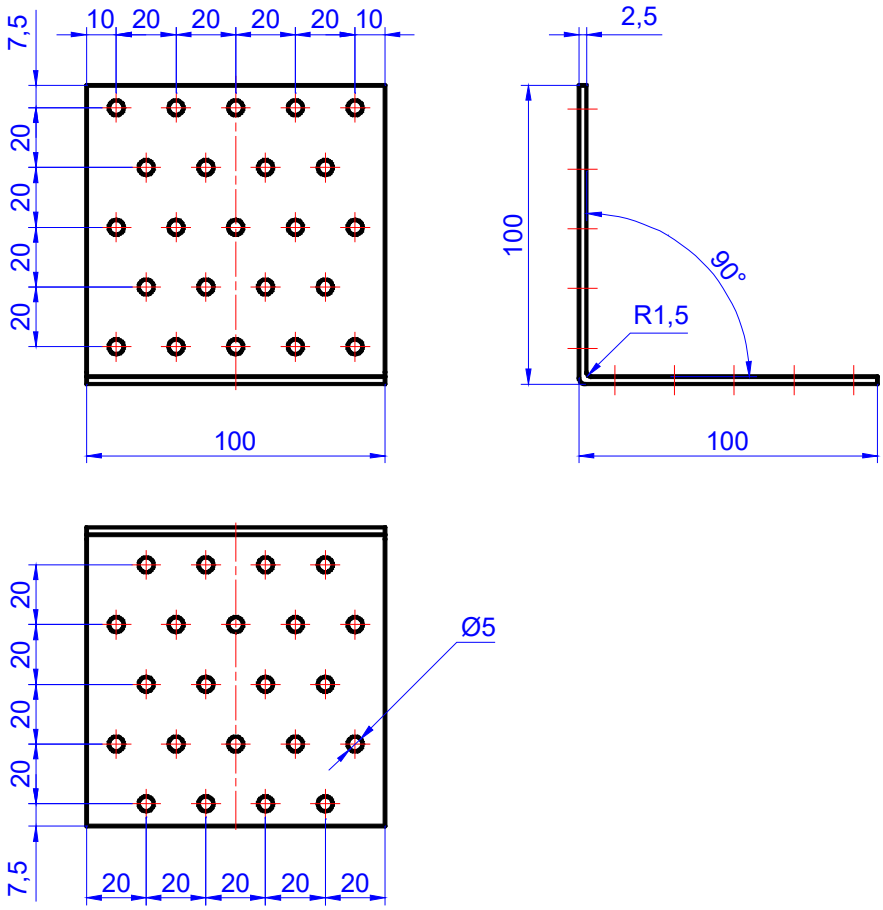

Figure A.2.22. Angle bracket MK 100×100×100×2,5

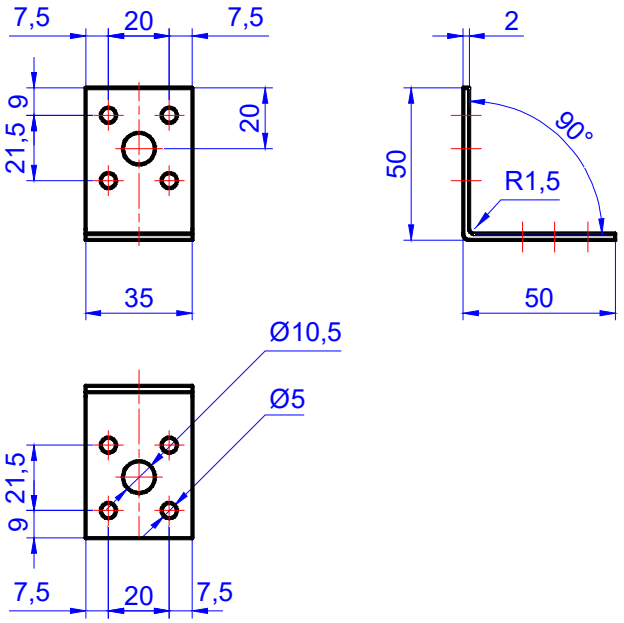

Figure A.2.23. Angle bracket MK 50×50×35×2,0

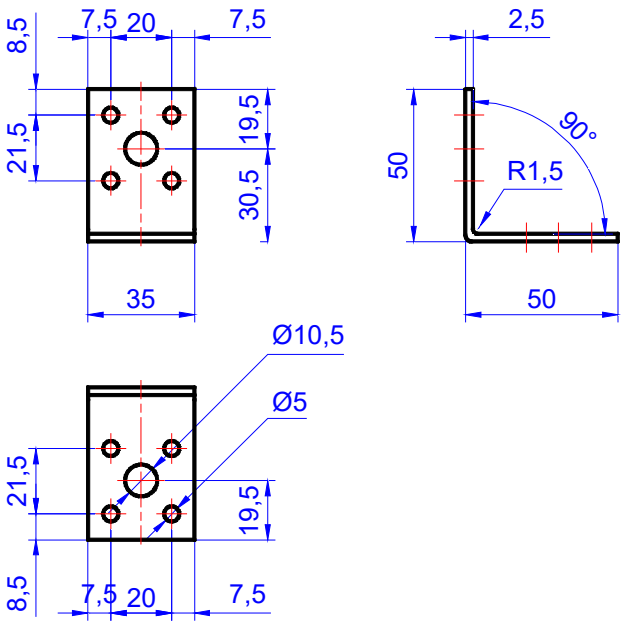

Figure A.2.24. Angle bracket MK 50×50×35×2,5

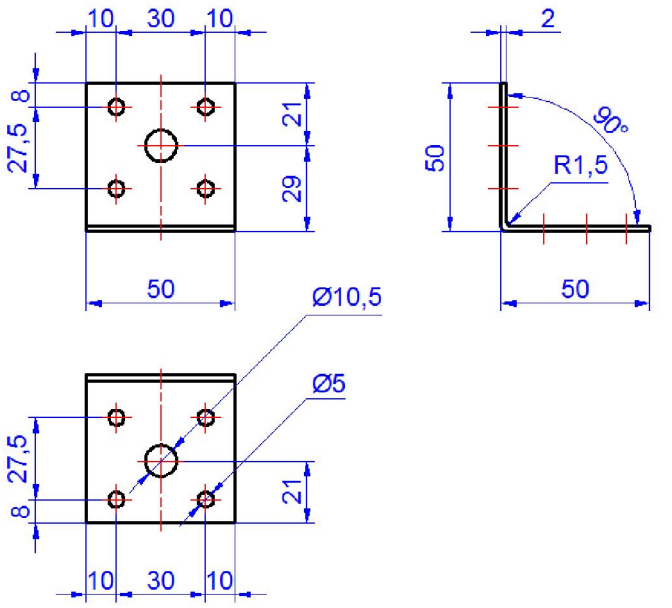

Figure A.2.25. Angle bracket MK 50×50×50×2,0

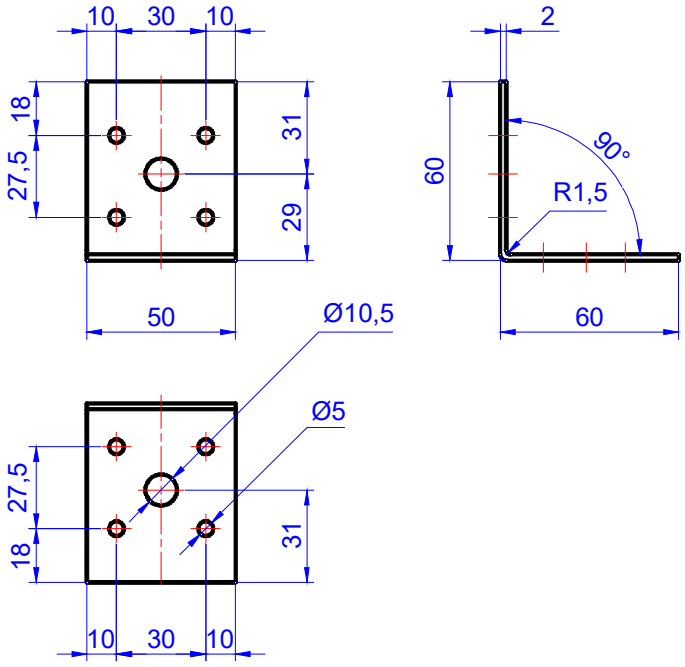

Figure A.2.26. Angle bracket MK 60×60×50×2,0

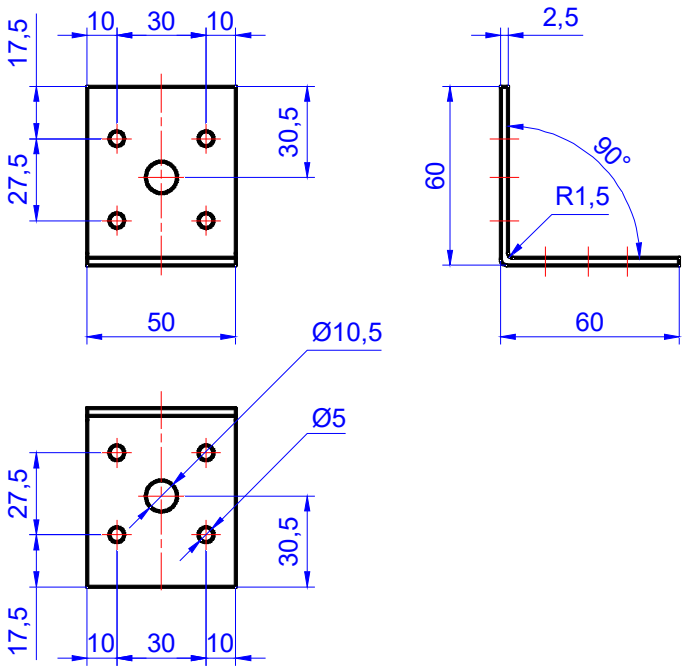

Figure A.2.27. Angle bracket MK 60×60×50×2,5

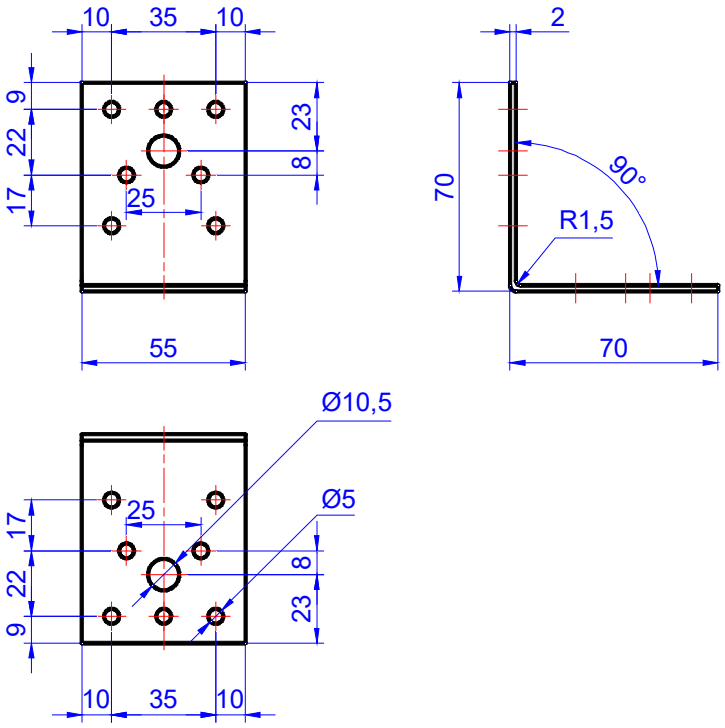

Figure A.2.28. Angle bracket MK 70×70×55×2,0

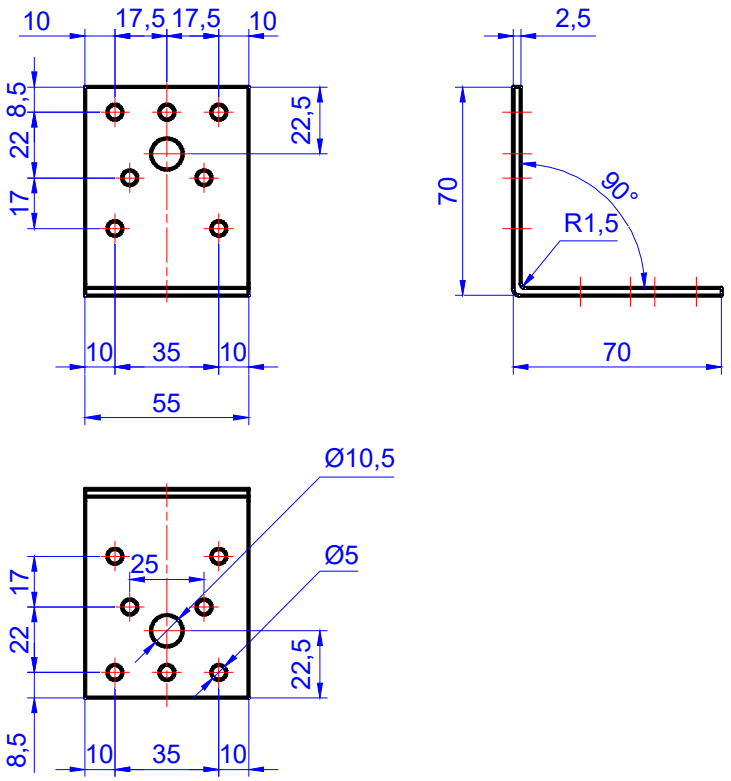

Figure A.2.29. Angle bracket MK 70×70×55×2,5

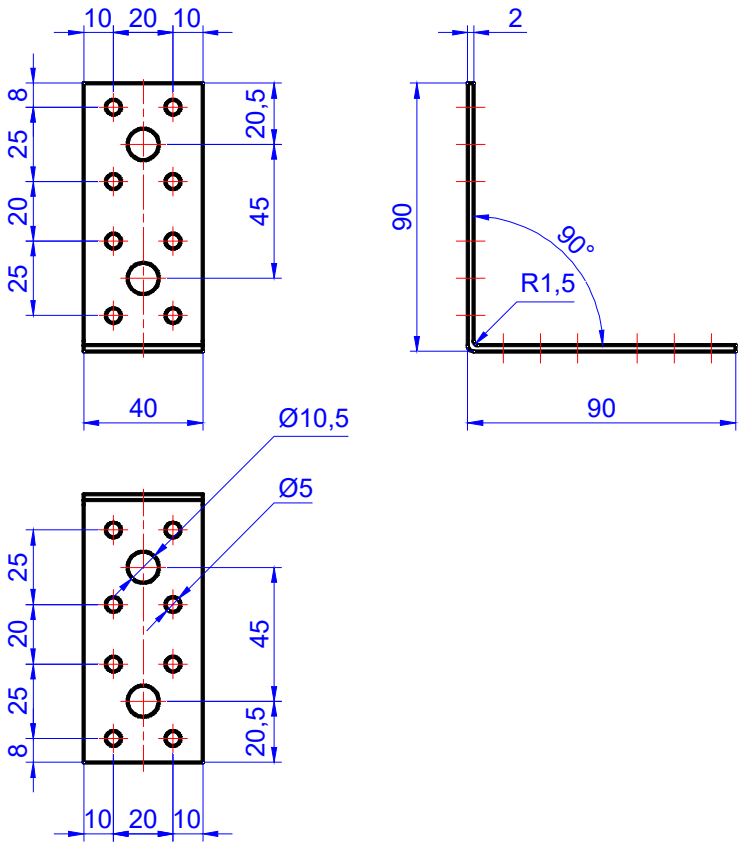

Figure A.2.30. Angle bracket MK 90×90×40×2,0

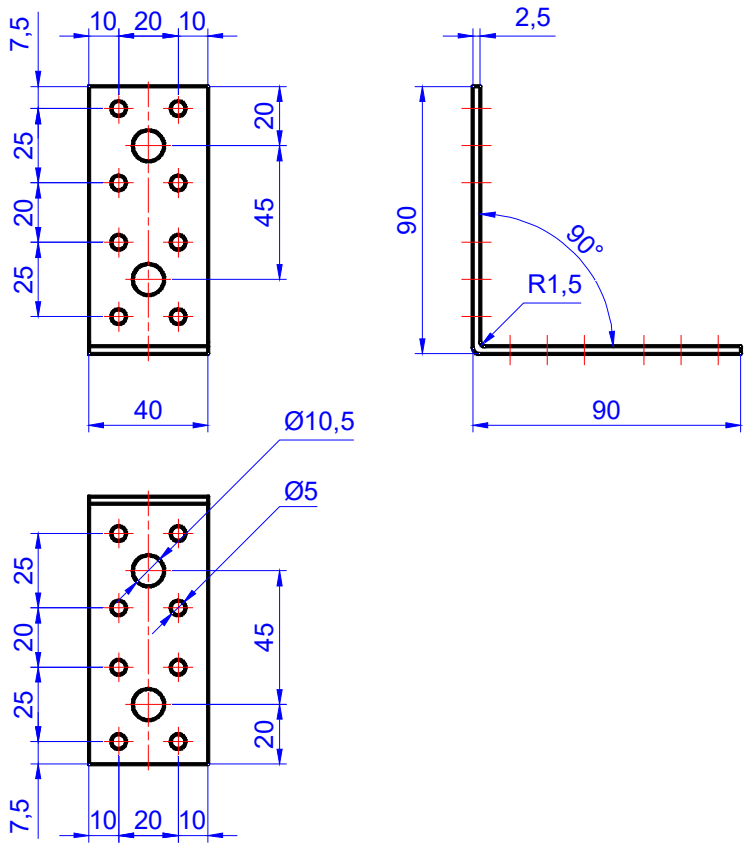

Figure A.2.31. Angle bracket MK 90×90×40×2,5

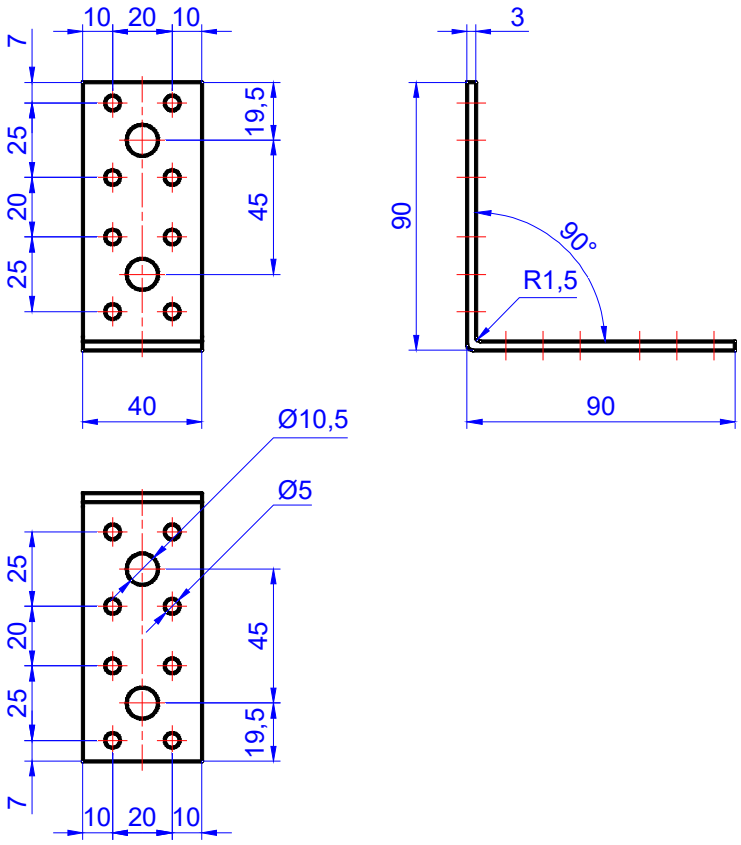

Figure A.2.32. Angle bracket MK 90×90×40×3,0

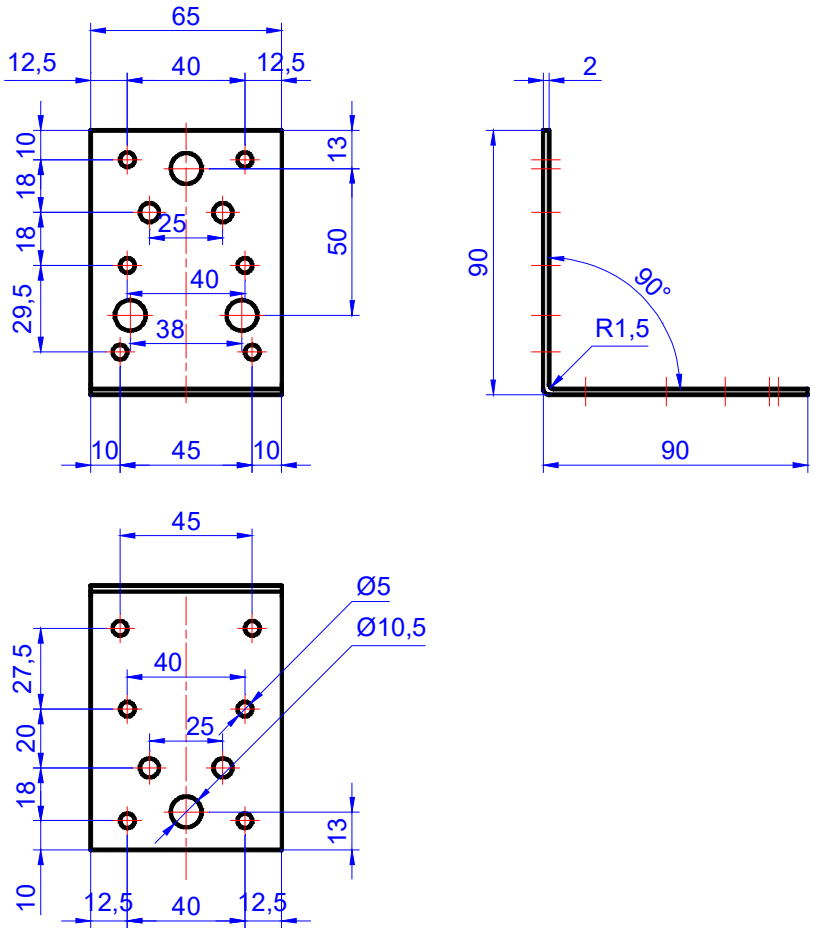

Figure A.2.33. Angle bracket MK 90×90×65×2,0

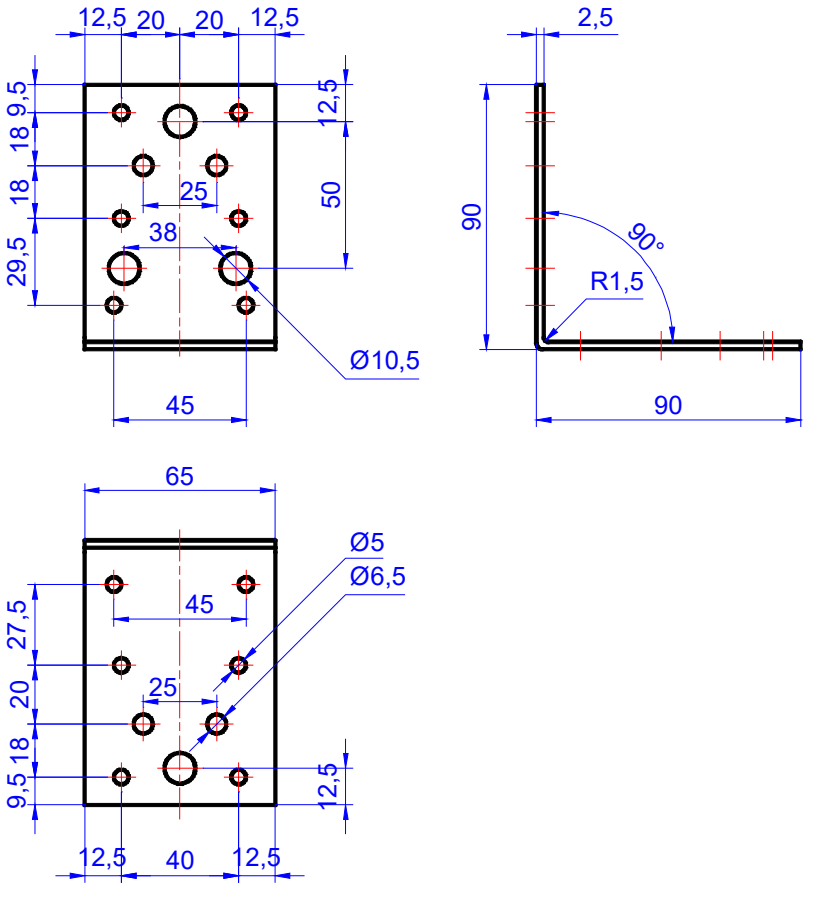

Figure A.2.34. Angle bracket MK 90×90×65×2,5

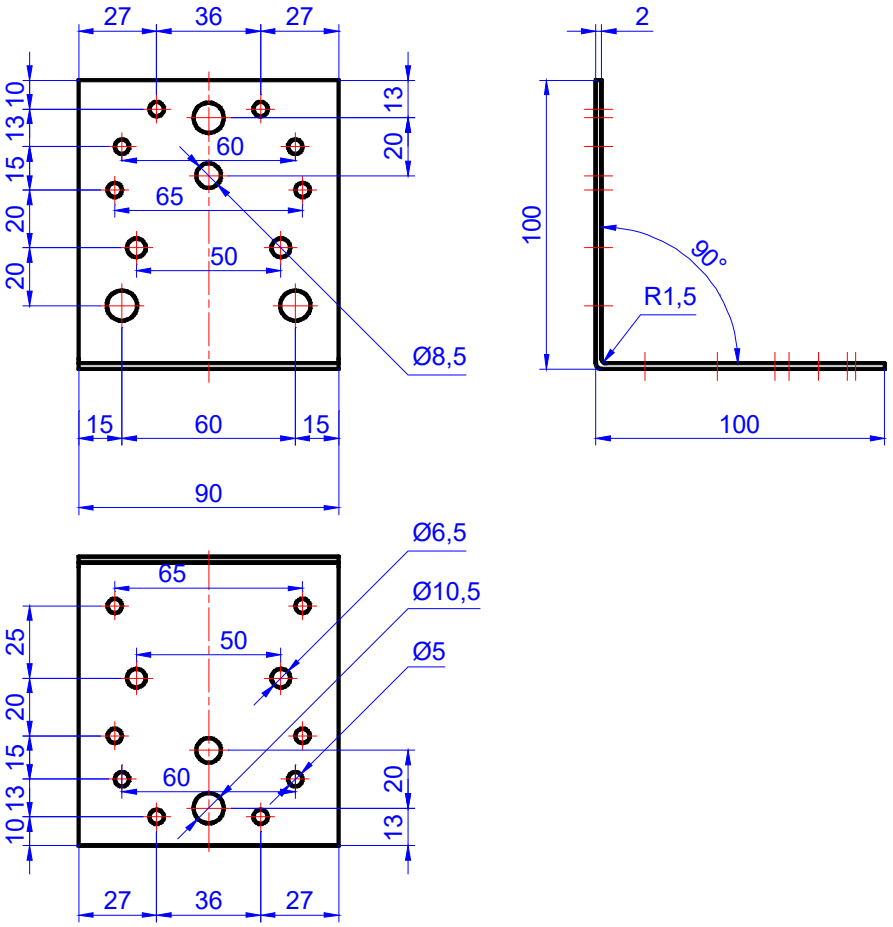

Figure A.2.35. Angle bracket MK 100×100×90×2,0

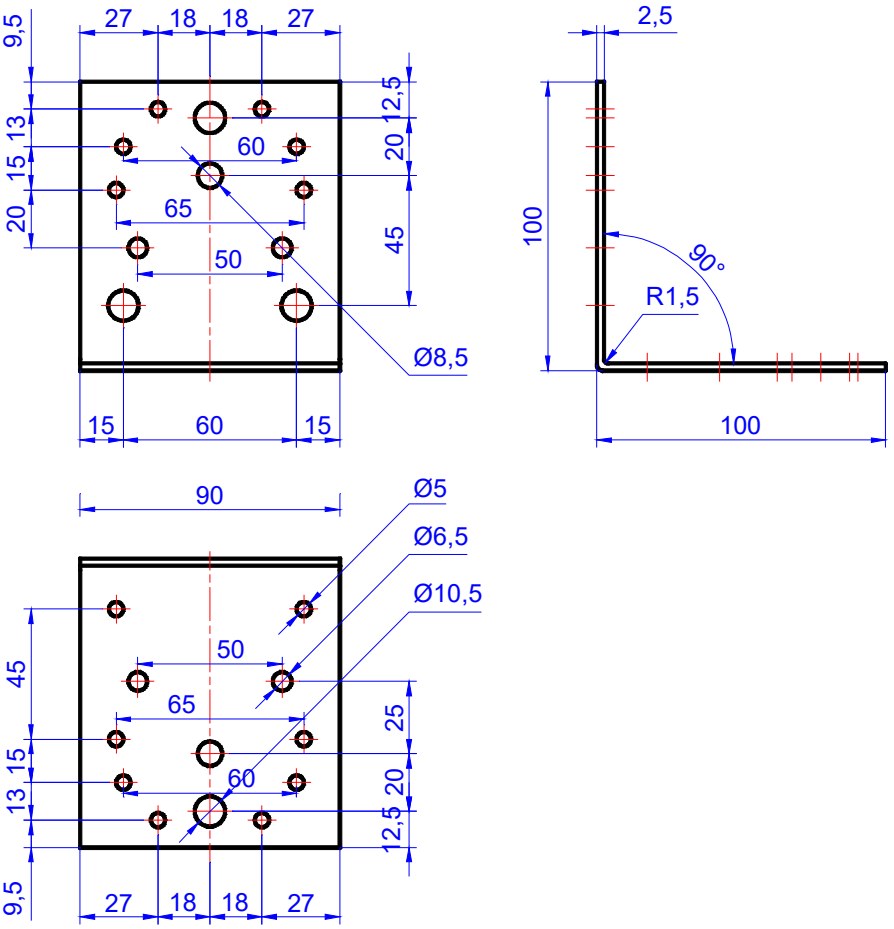

Figure A.2.36. Angle bracket MK 100×100×90×2,5

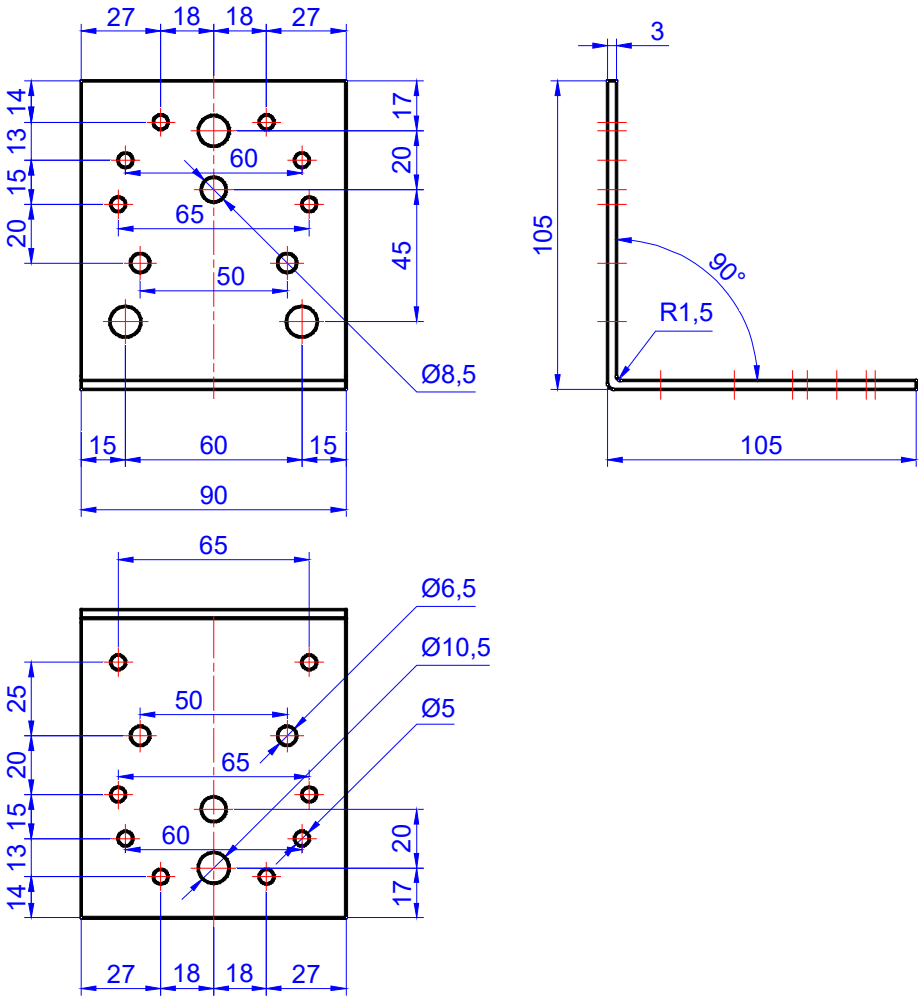

Figure A.2.37. Angle bracket MK 105×105×90×3,0

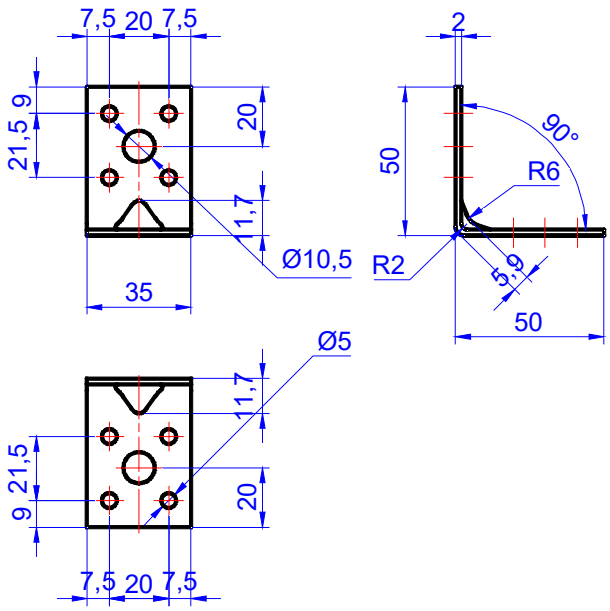

Figure A.2.38. Angle bracket MKS 50×50×35×2,0

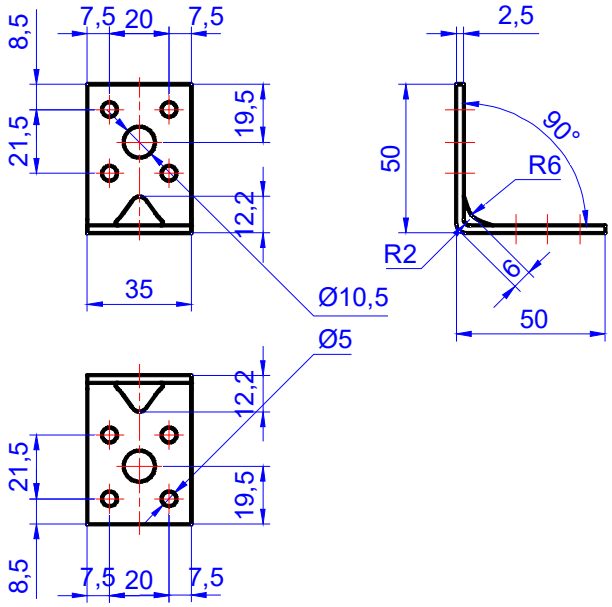

Figure A.2.39. Angle bracket MKS 50×50×35×2,5

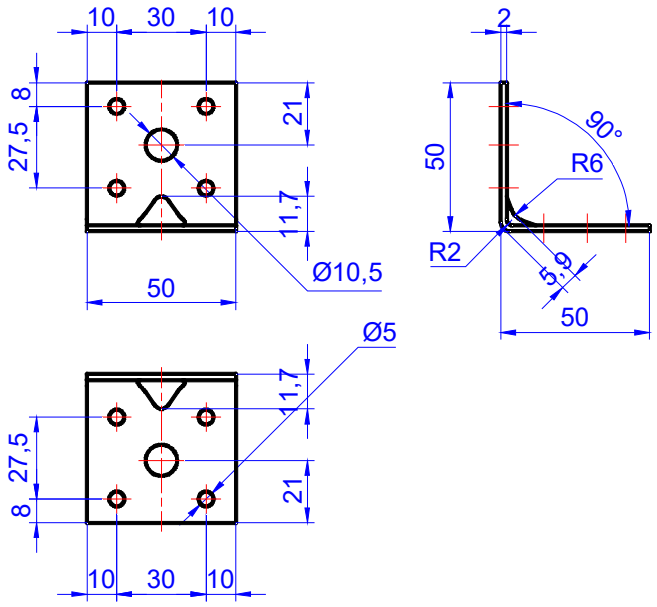

Figure A.2.40. Angle bracket MKS 50×50×50×2,0

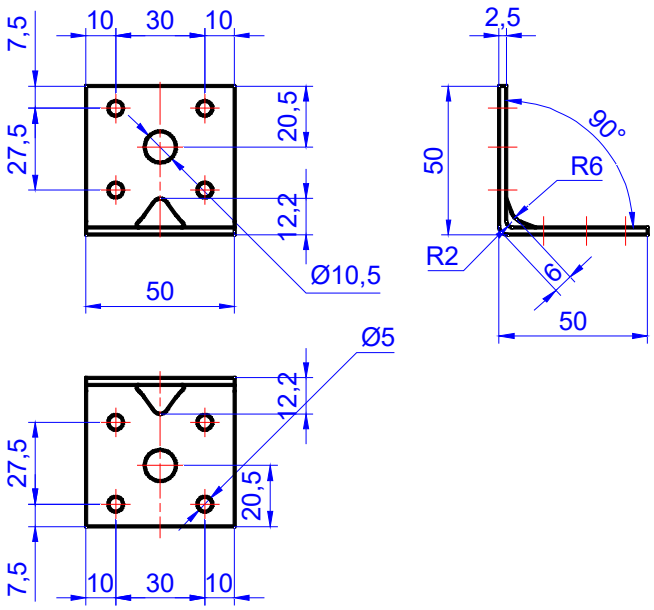

Figure A.2.41. Angle bracket MKS 50×50×50×2,5

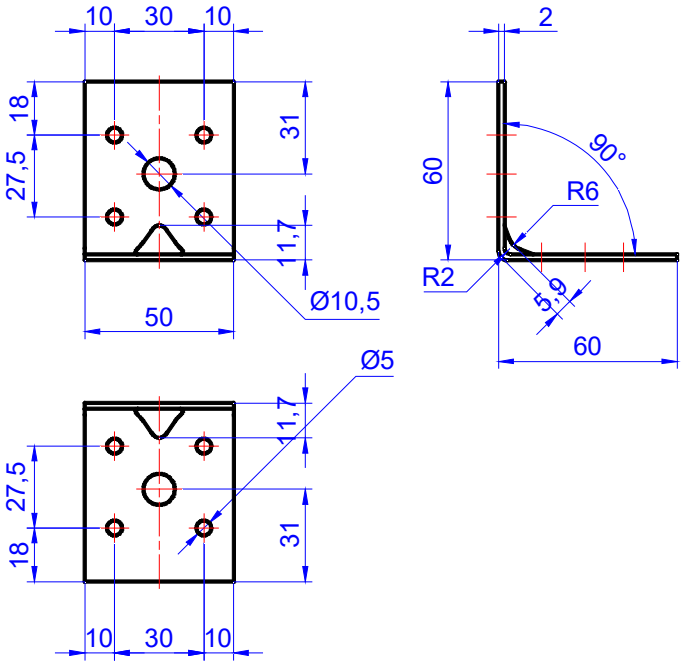

Figure A.2.42. Angle bracket MKS 60×60×50×2,0

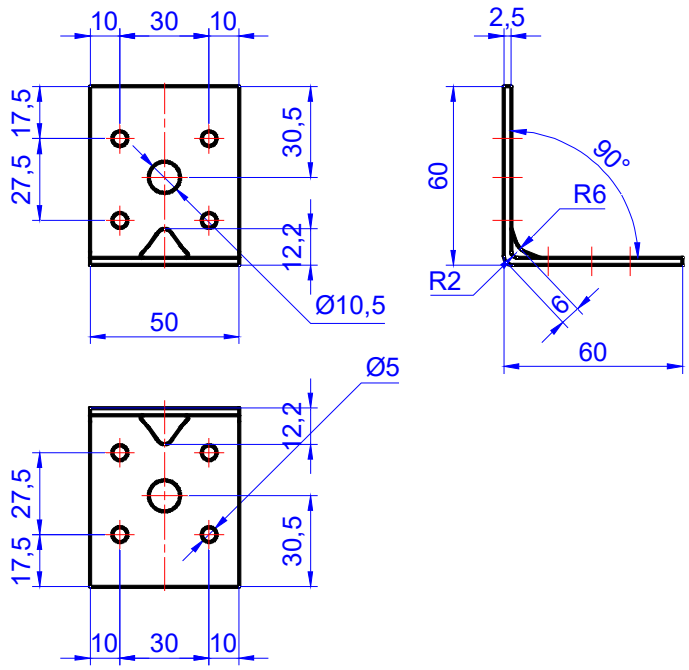

Figure A.2.43. Angle bracket MKS 60×60×50×2,5

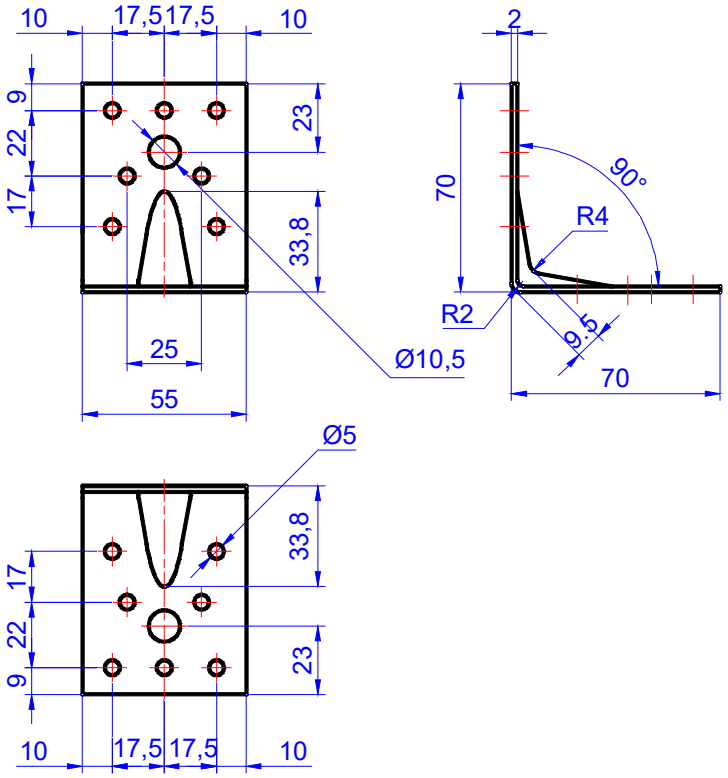

Figure A.2.44. Angle bracket MKS 70×70×55×2,0

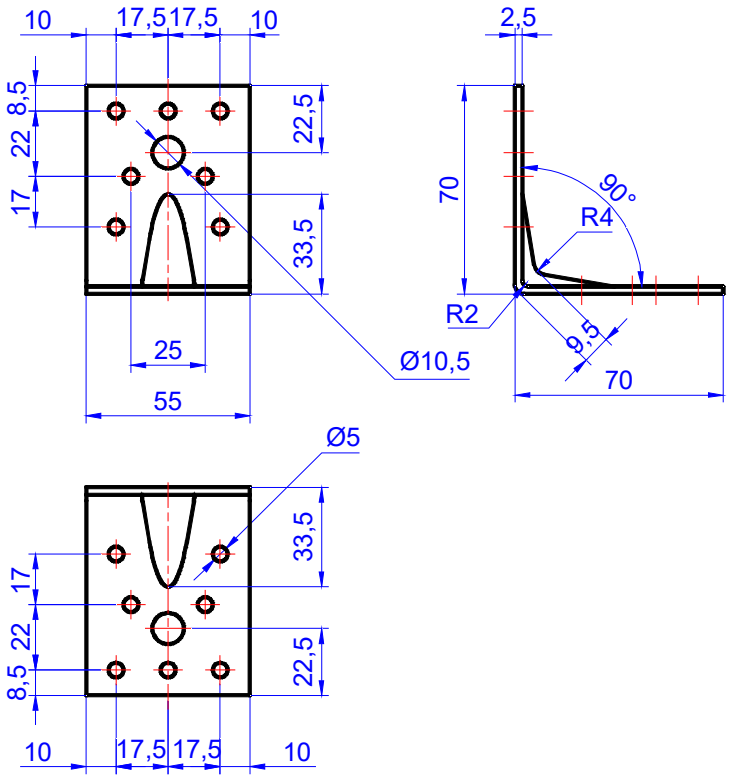

Figure A.2.45. Angle bracket MKS 70×70×55×2,5

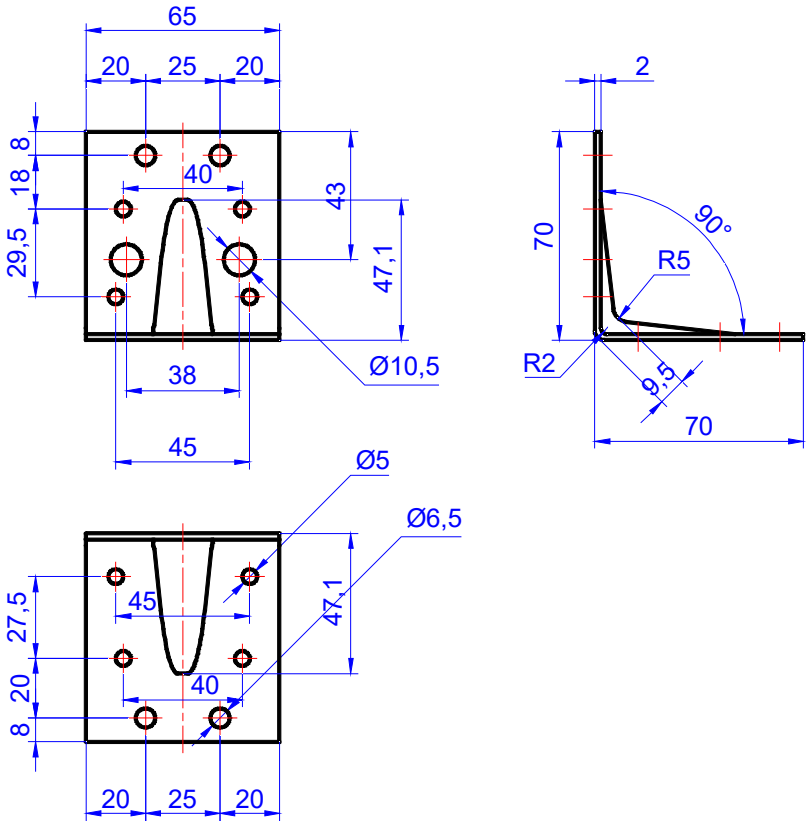

Figure A.2.46. Angle bracket MKS 70×70×65×2,0

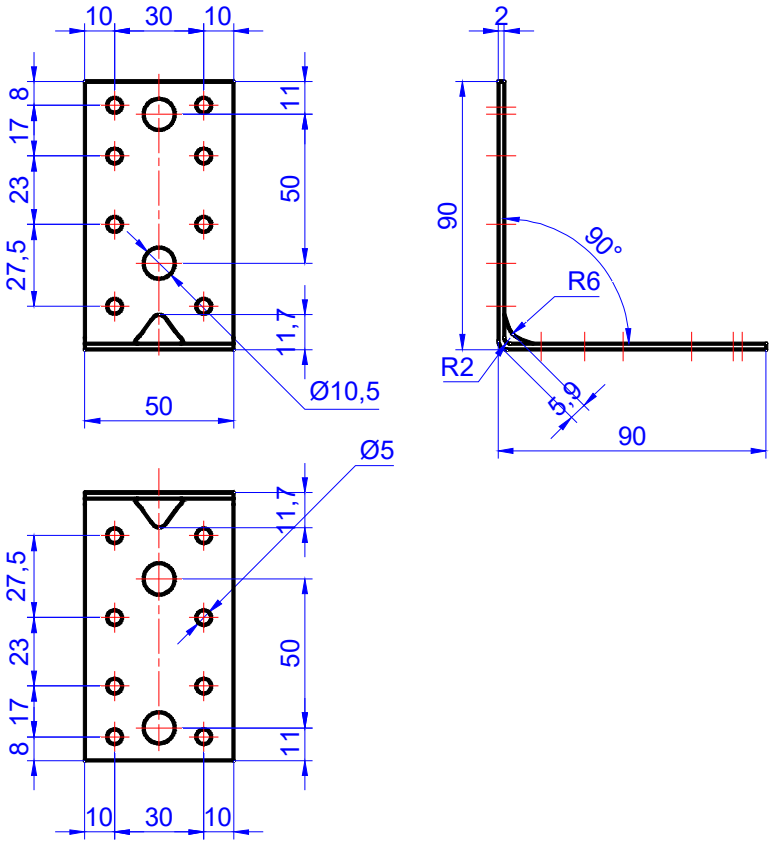

Figure A.2.47. Angle bracket MKS 90×90×50×2,0

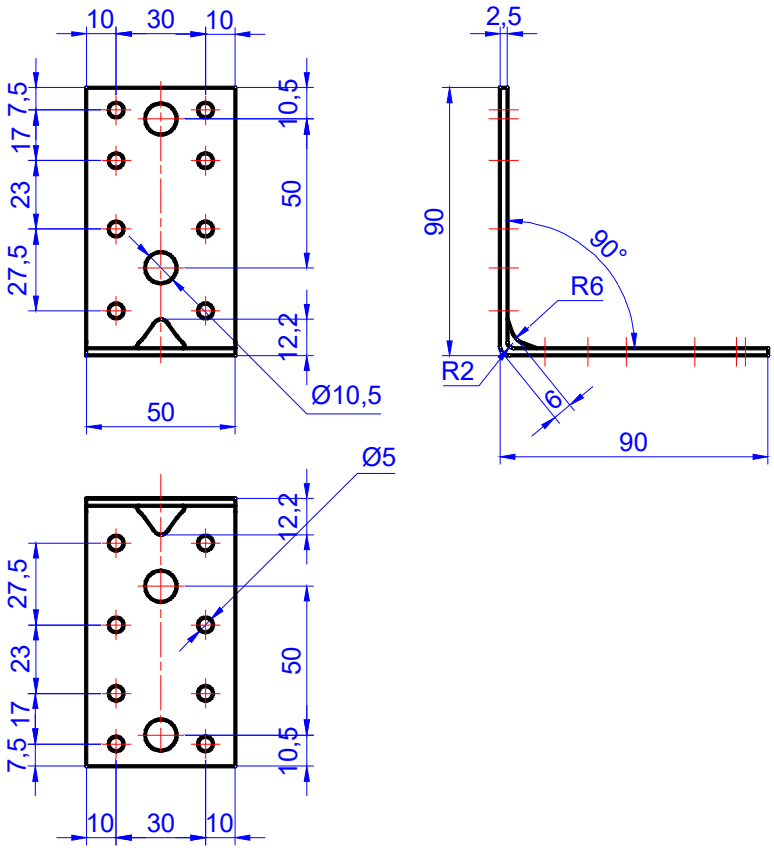

Figure A.2.48. Angle bracket MKS 90×90×50×2,5

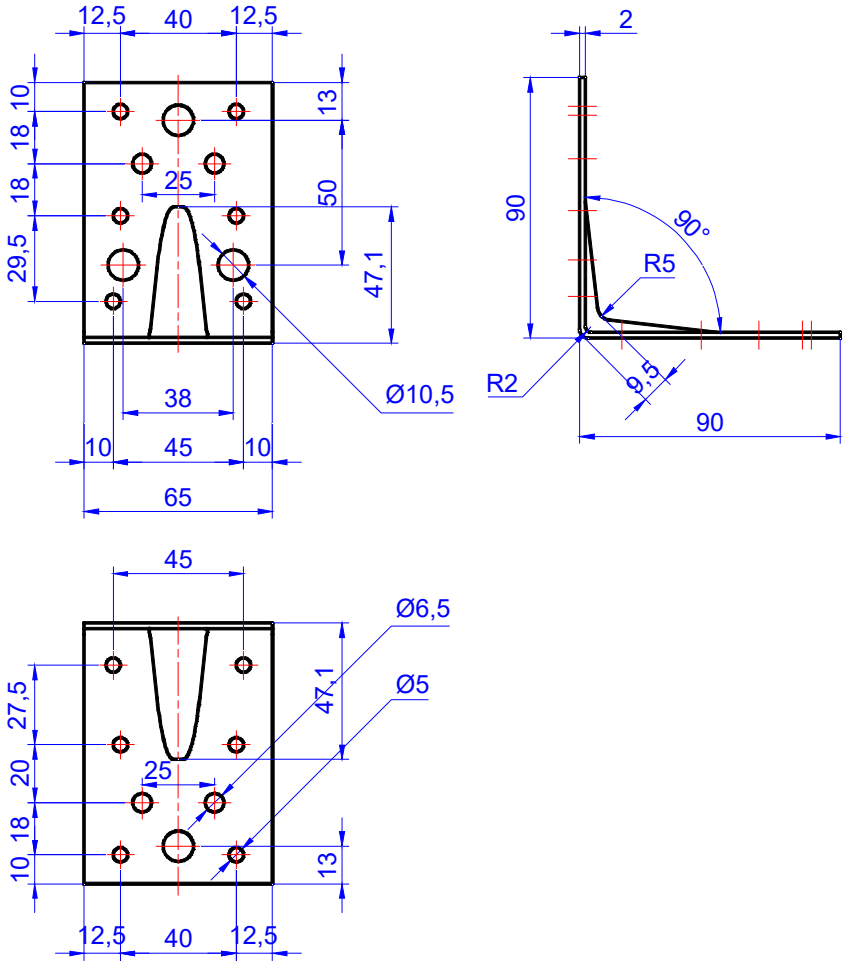

Figure A.2.49. Angle bracket MKS 90×90×65×2,0

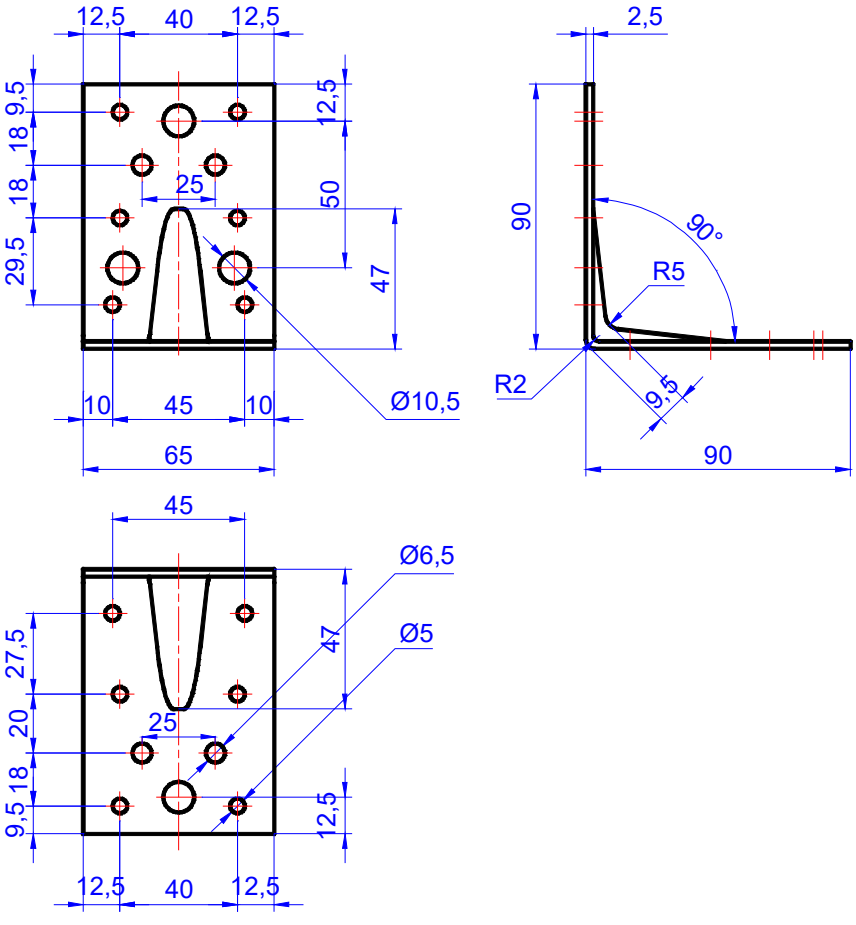

Figure A.2.50. Angle bracket MKS 90×90×65×2,5

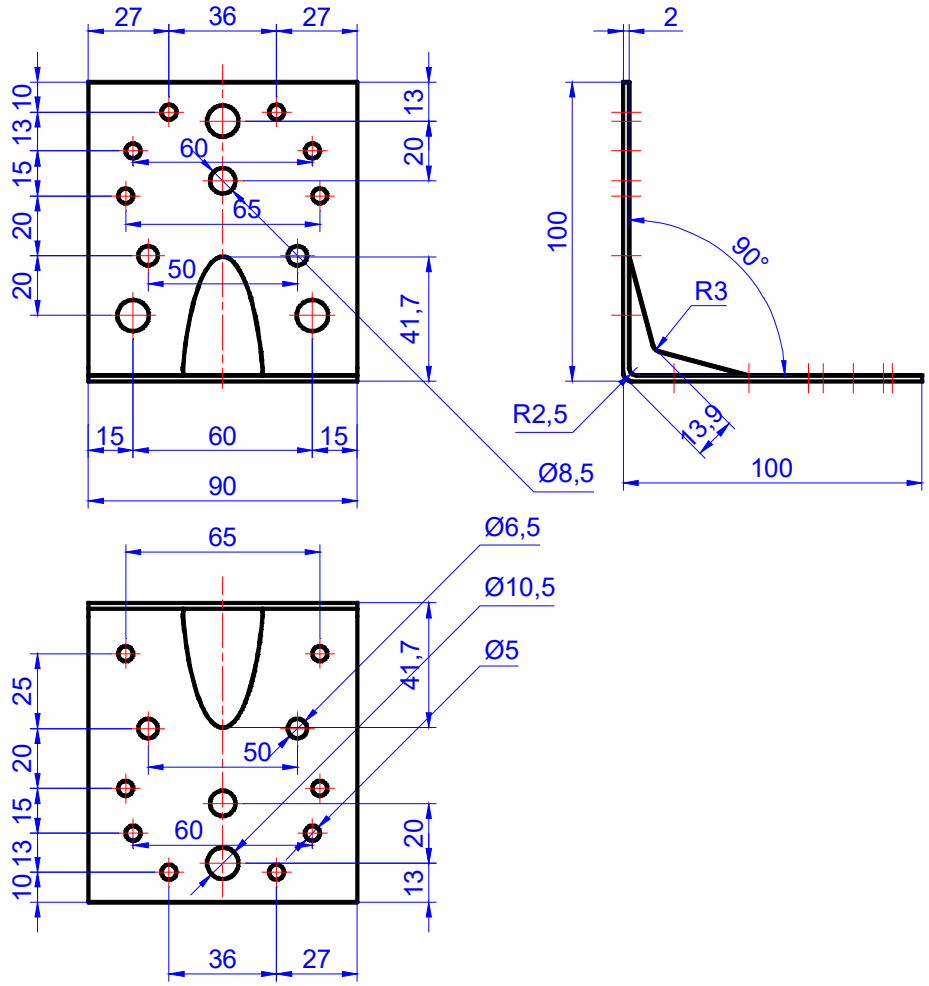

Figure A.2.51. Angle bracket MKS 100×100×90×2,0

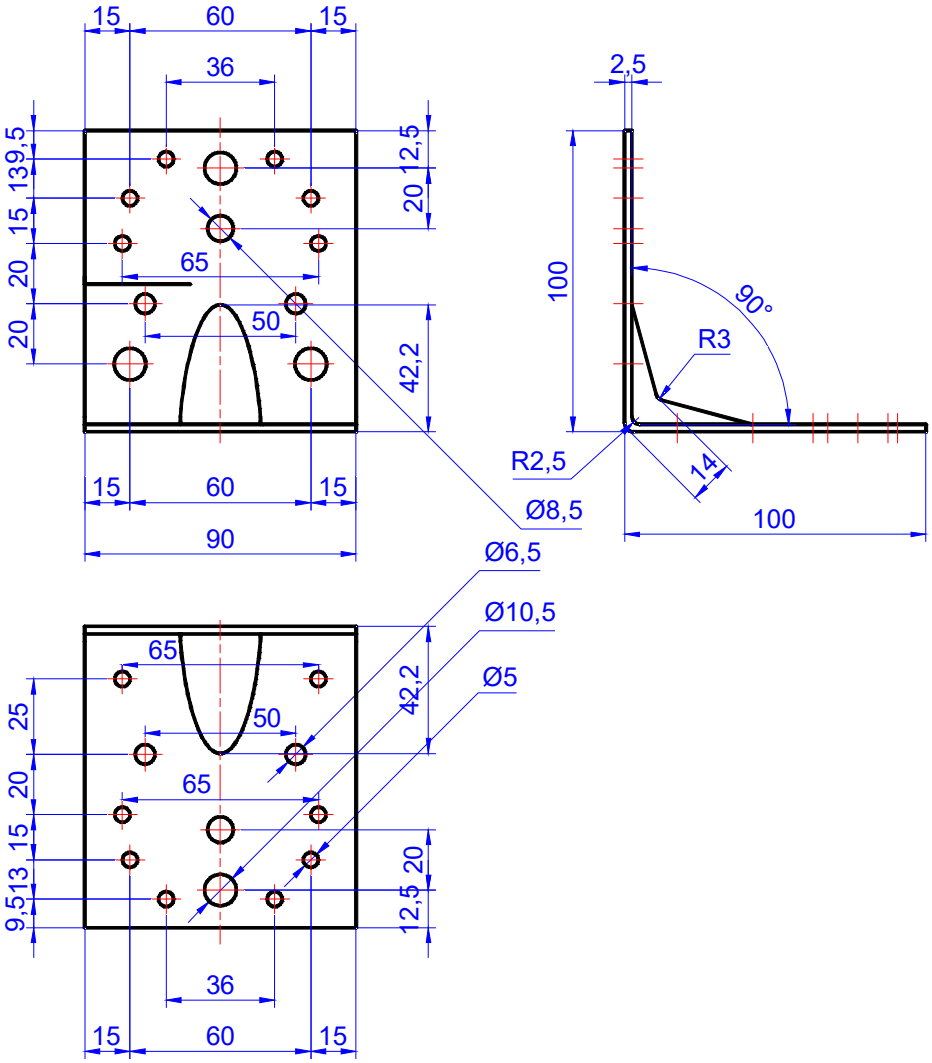

Figure A.2.52. Angle bracket MKS 100×100×90×2,5

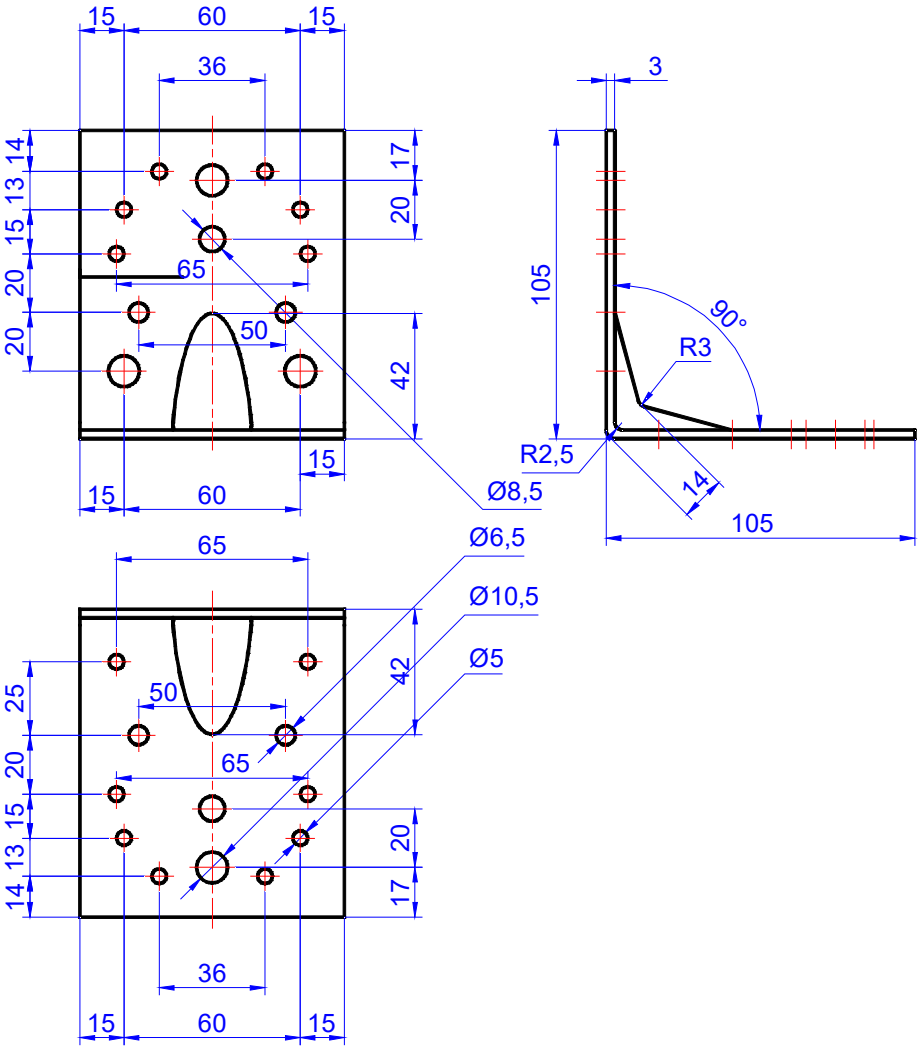

Figure A.2.53. Angle bracket MKS 105×105×90×3,0

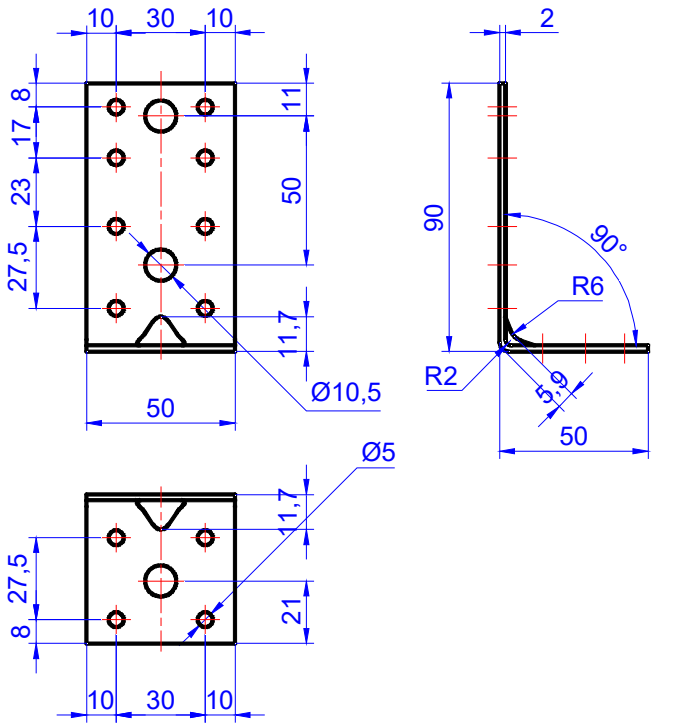

Figure A.2.54. Angle bracket MKNS 90×50×50×2,0

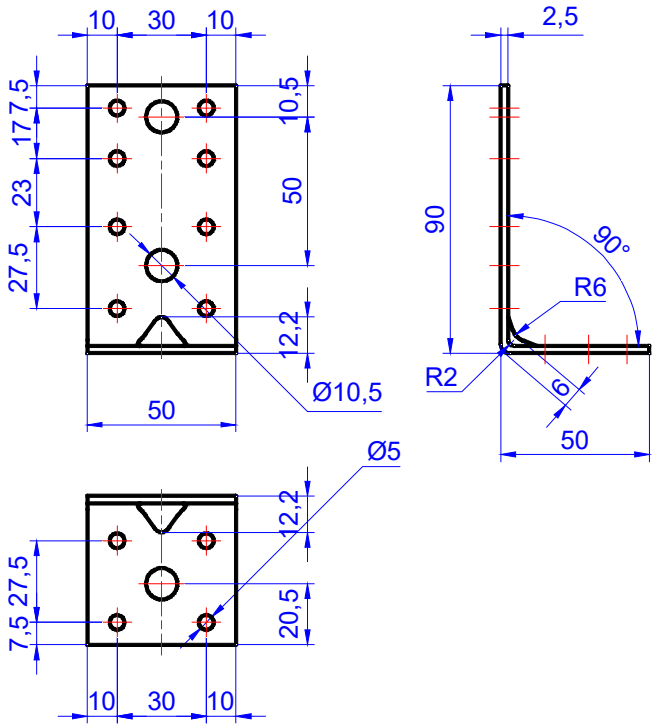

Figure A.2.55. Angle bracket MKNS90×50×50×2,5

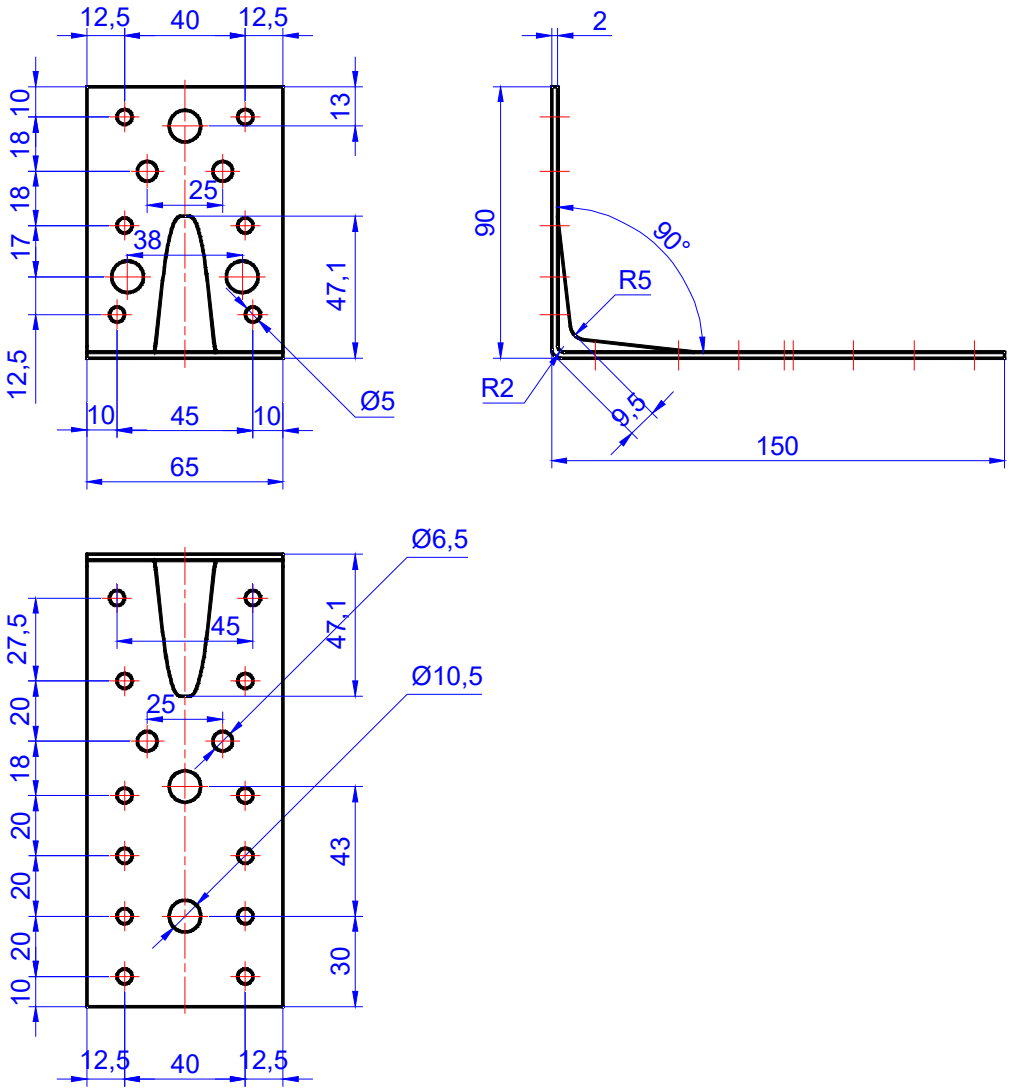

Figure A.2.56. Angle bracket MKNS 150×90×65×2,0

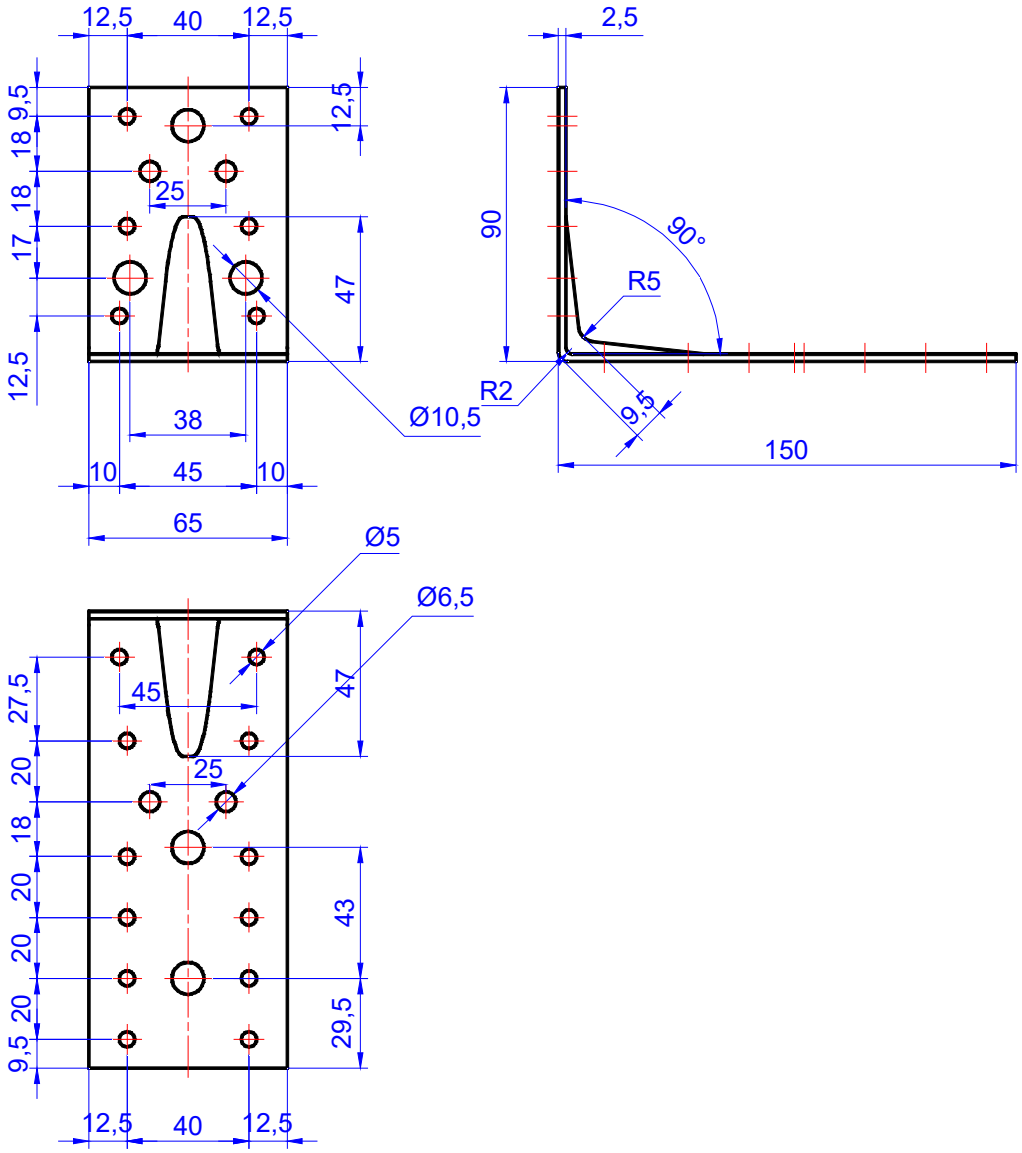

Figure A.2.57. Angle bracket MKNS 150×90×65×2,5

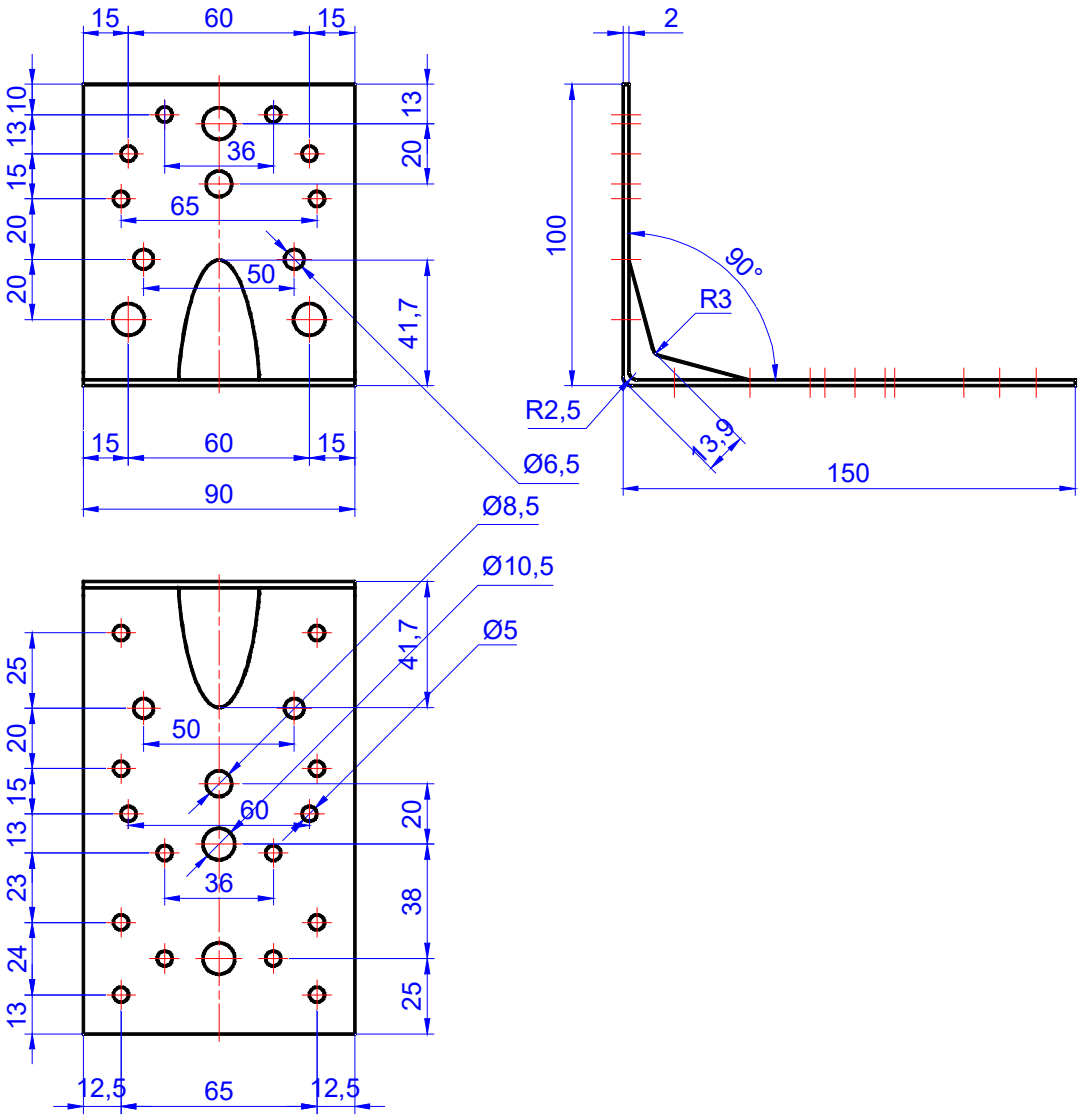

Figure A.2.58. Angle bracket MKNS 150×100×90×2,0

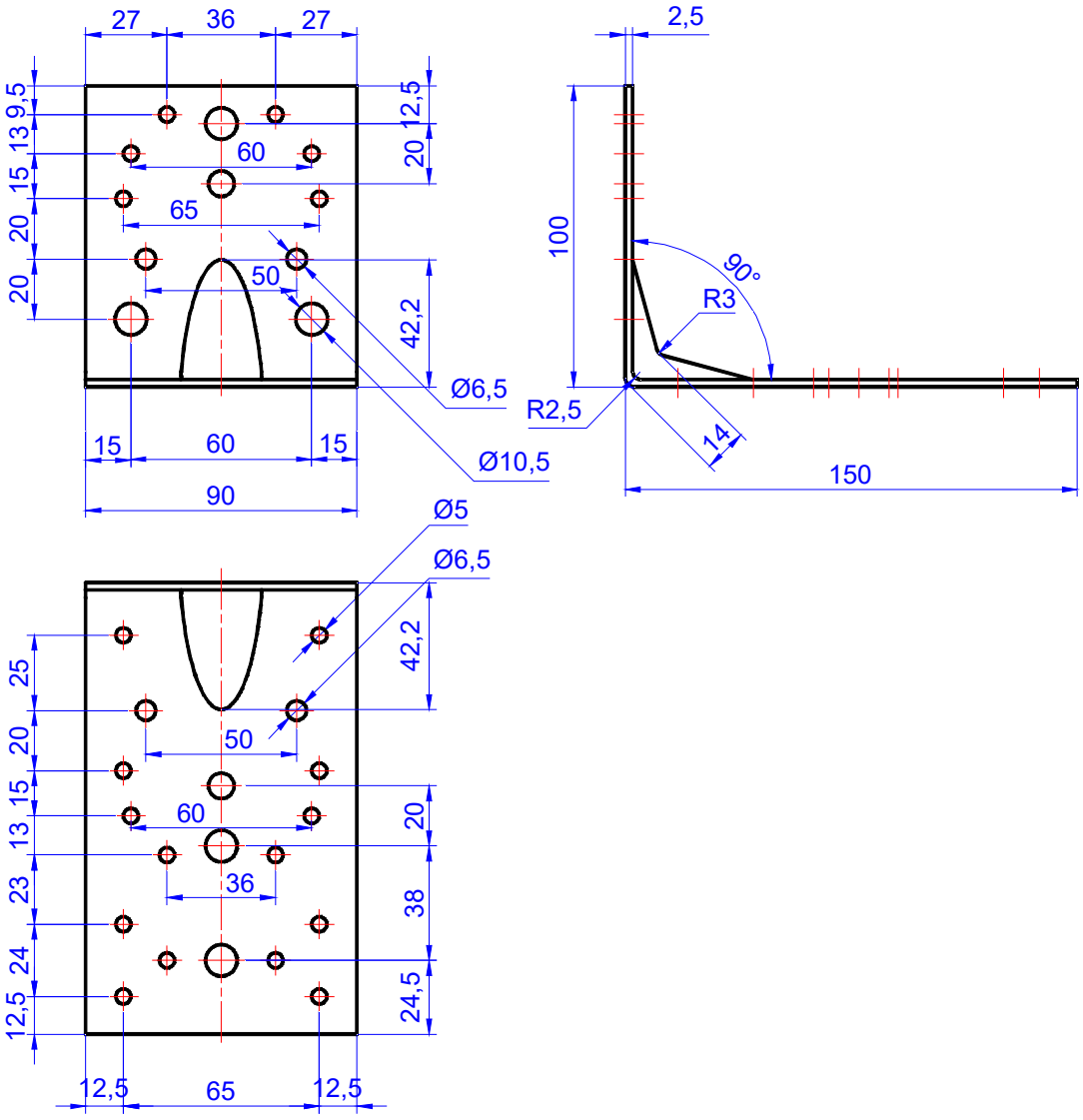

Figure A.2.59. Angle bracket MKNS 150×100×90×2,5

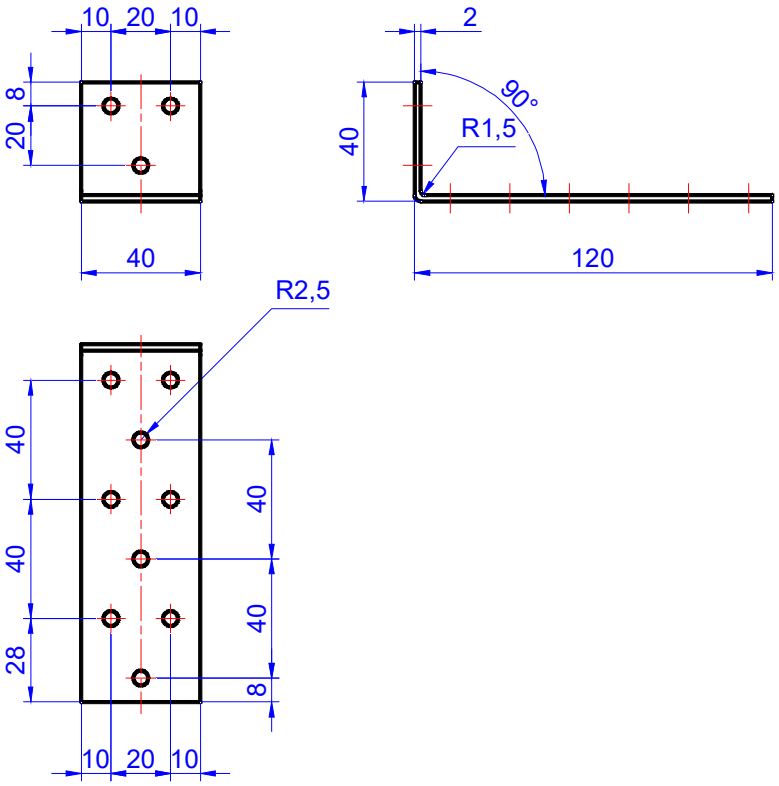

Figure A.2.60. Angle bracket MKN 120×40×40×2,0

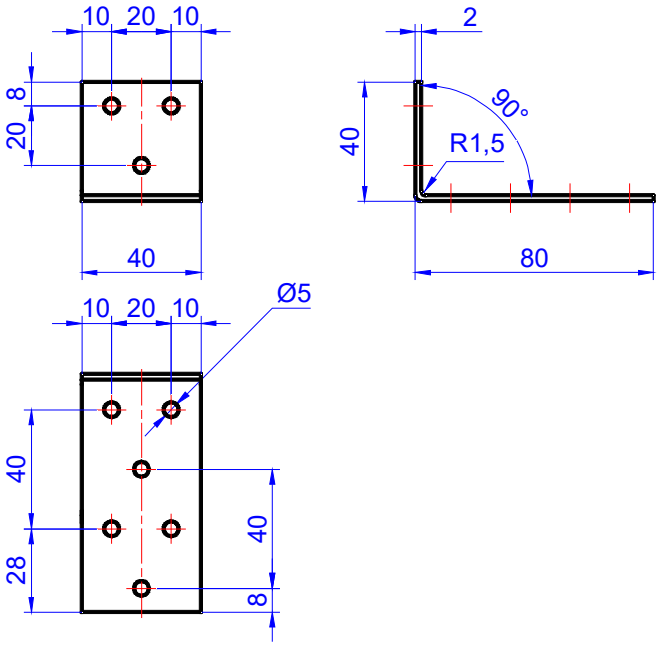

Figure A.2.61. Angle bracket MKN 80×40×40×2,0

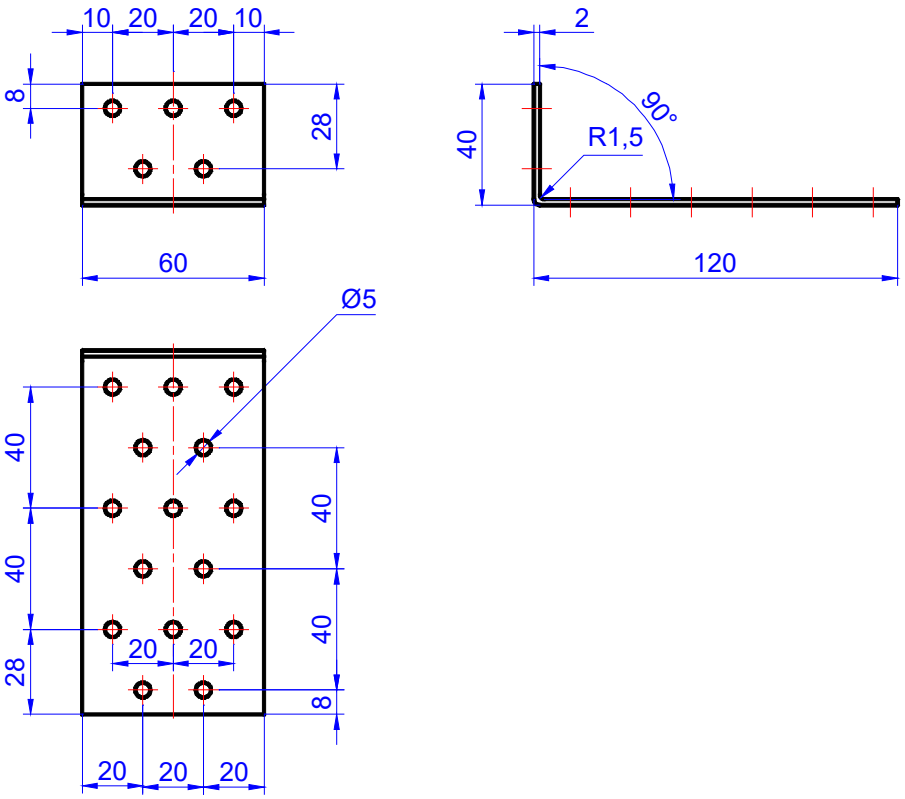

Figure A.2.62. Angle bracket MKN 120×40×60×2,0

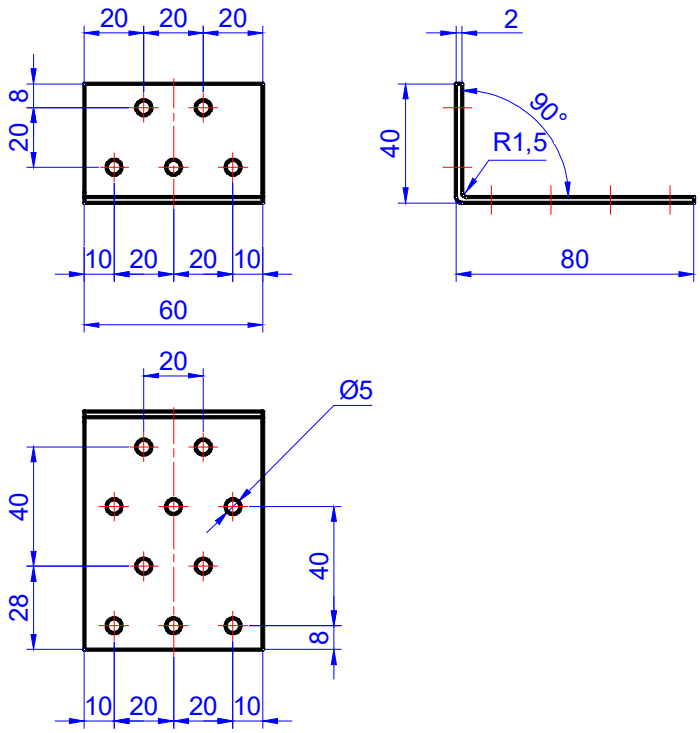

Figure A.2.63. Angle bracket MKN 80×40×60×2,0

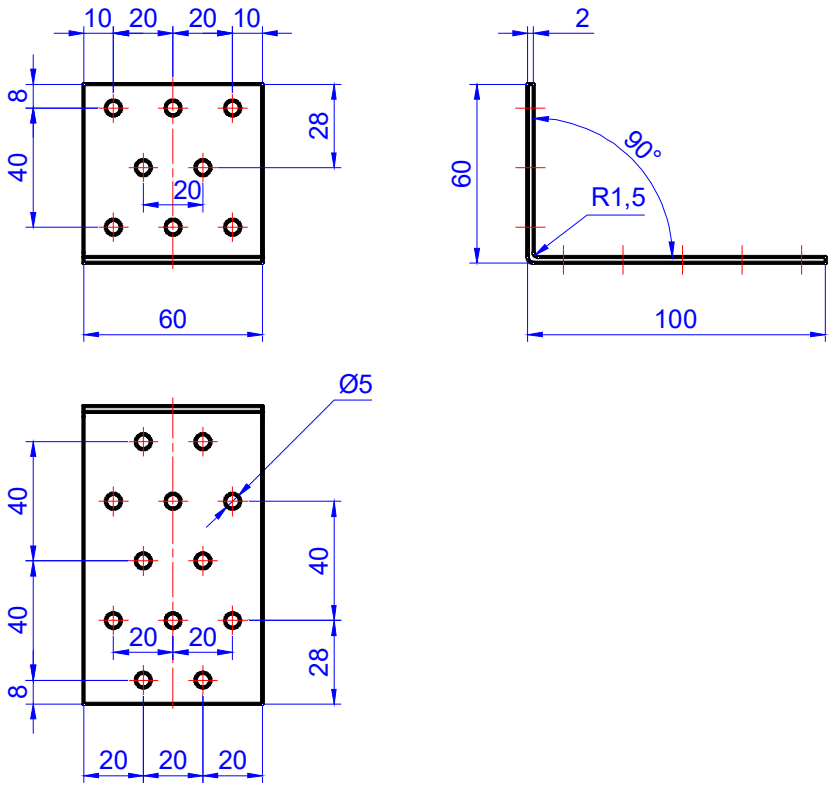

Figure A.2.64. Angle bracket MKN 100×60×60×2,0

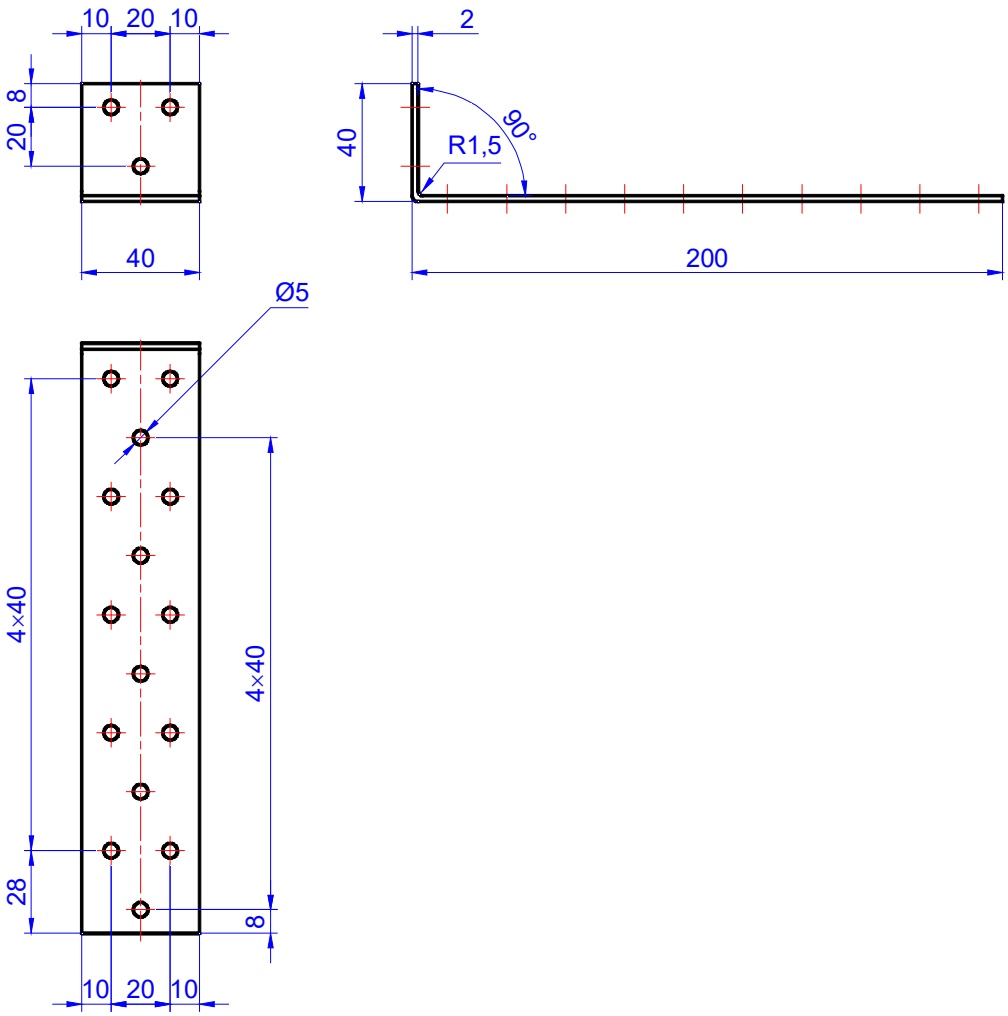

Figure A.2.65. Angle bracket MKN 200×40×40×2,0

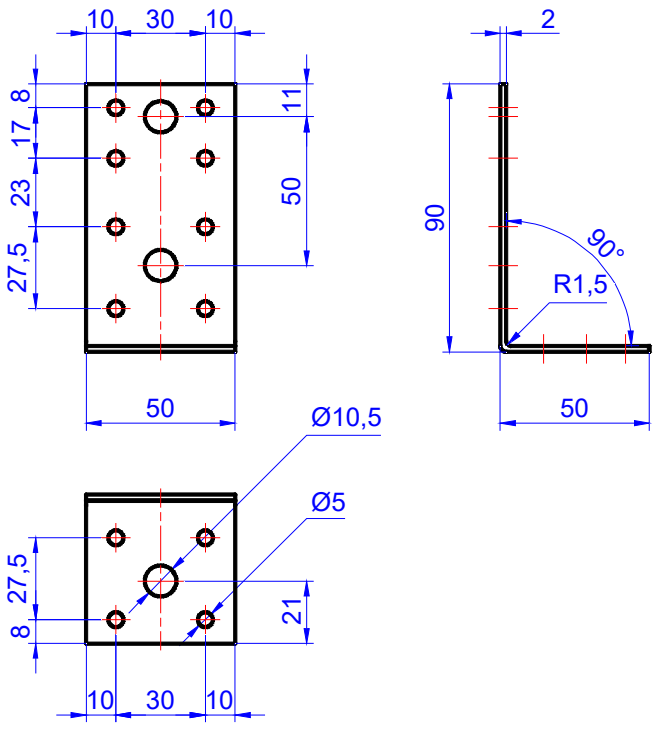

Figure A.2.66. Angle bracket MKN 90×50×50×2,0

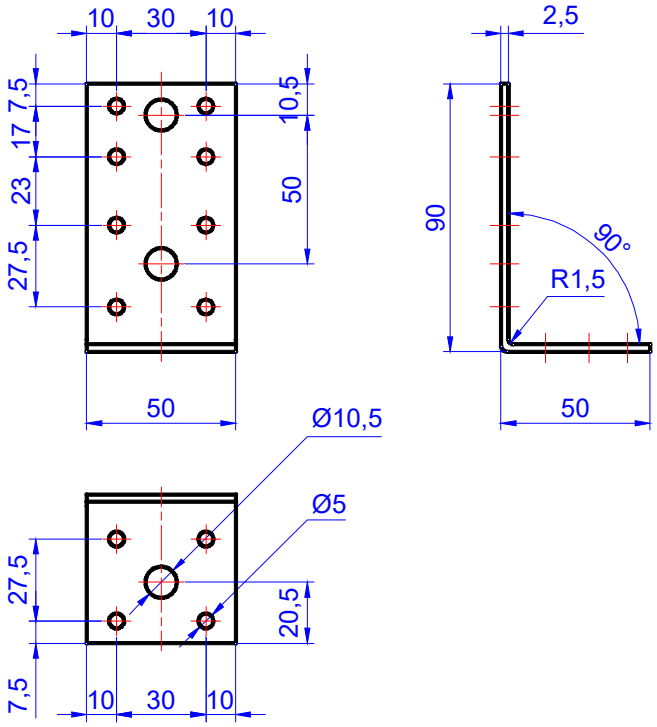

Figure A.2.67. Angle bracket MKN 90×50×50×2,5

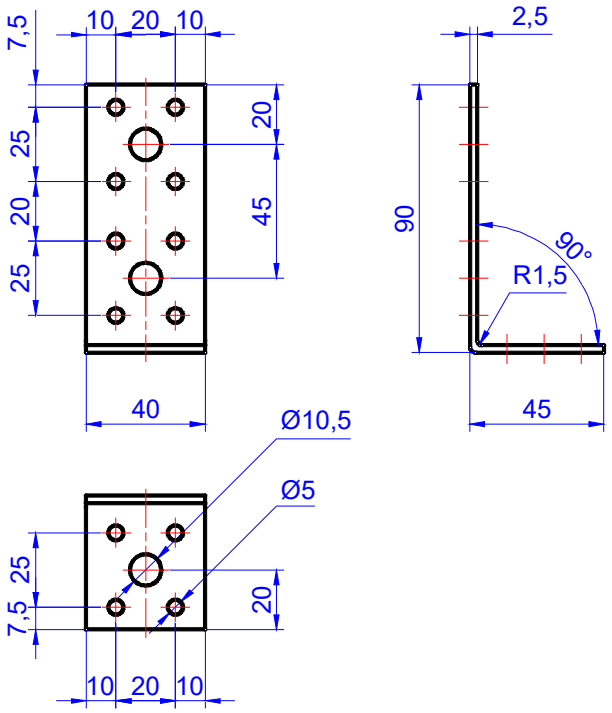

Figure A.2.68. Angle bracket MKN 95×45×40×2,5

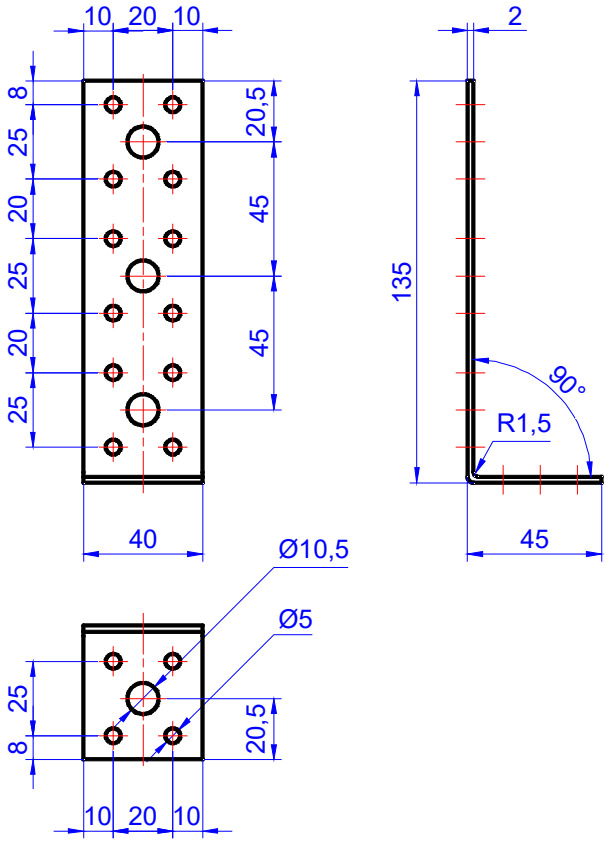

Figure A.2.69. Angle bracket MKN 135×45×40×2,0

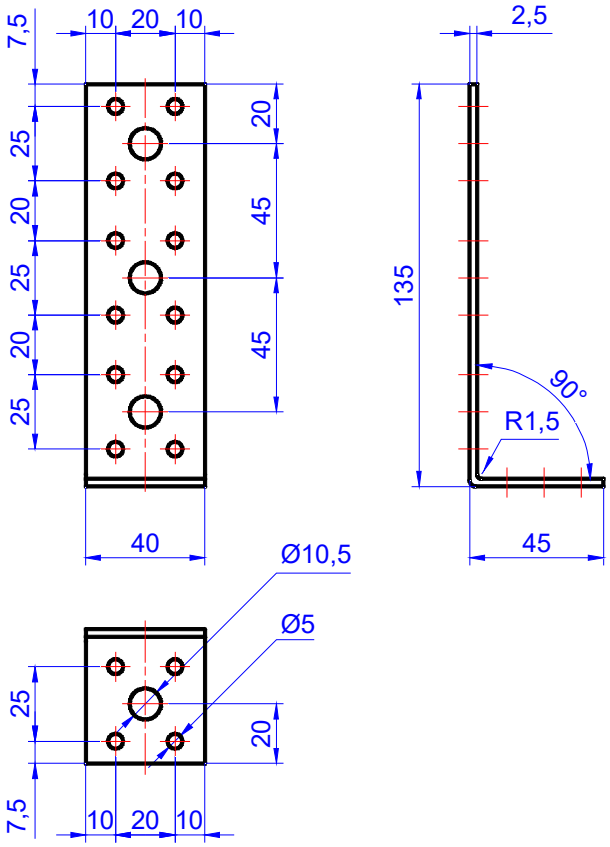

Figure A.2.70. Angle bracket MKN 135×45×40×2,5

ANNEX 3. Characteristic load-carrying capacities of angle brackets

Support conditions

The distance between the timber members in the area of the connection must not exceed 3 mm. The members shall be prevented from rotation.

Fastener specification

Number and position of nails presented in the Annex 4.

Wane

Wane is not allowed, the timber has to be sharp-edged in the area of the contact with the angle brackets.

Characteristic load-carrying capacities

A.3.1. Timber beam to timber column connections with the angle brackets

The calculation model of timber beam to timber beam connection with the angle brackets is showed in the ANNEX 1.Figure A.3.1.

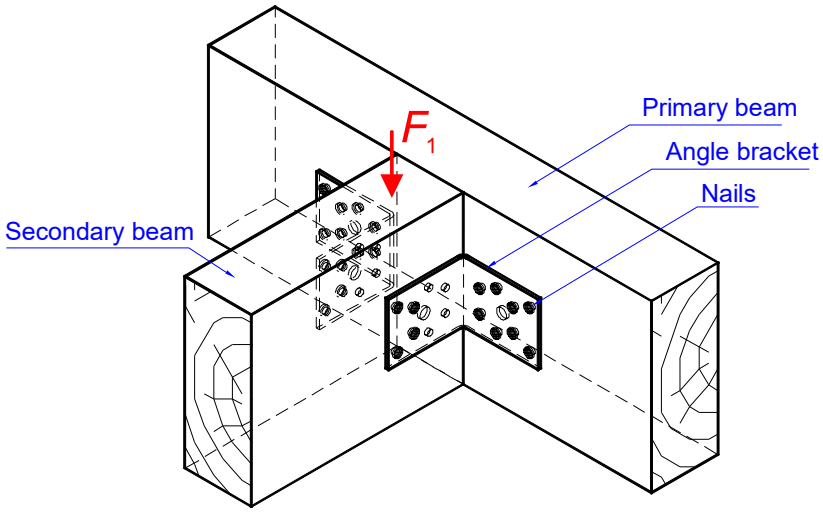

Figure A.3.1. Typical installation of the angle brackets in the timber beam to timber beam connections

The characteristic shear load-bearing capacity $F_{1.k}$ of the joint connecting the timber beam to the timber beam is given in 0.

Table A.3.1. Characteristic load-carrying capacities $F_{1,k}$ of timber beam to timber beam connection for load direction according Figure A.3.1.

Angle bracket type		Nails dimensions (mm)	Number of nails in		Position of nails shown in Figure [1)]	$F_{1,k}$ kN
			primary beam	secondary beam		
Isosceles Angle brackets						
MK	60×60×40×2,0	4,0x40	8	6	A.4.1	1,56
MK	80×80×40×2,0	4,0x40	12	6	A.4.2	1,15
MK	60×60×60×2,0	4,0x40	14	6	A.4.3	1,41
MK	80×80×60×2,0	4,0x40	20	10	A.4.4	2,05
MK	100×100×60×2,0	4,0x40	24	16	A.4.5	3,97
MK	60×60×80×2,0	4,0x40	20	8	A.4.6	2,23
MK	80×80×80×2,0	4,0x40	28	14	A.4.7	3,26
MK	100×100×80×2,0	4,0x40	34	22	A.4.8	5,70
MK	60×60×100×2,0	4,0x40	26	10	A.4.9	3,19
MK	80×80×100×2,0	4,0x40	36	18	A.4.10	4,31
MK	100×100×100×2,0	4,0x40	44	28	A.4.11	7,78
MK	60×60×40×2,5	4,0x40	8	6	A.4.12	1,80
MK	80×80×40×2,5	4,0x40	12	6	A.4.13	1,33
MK	60×60×60×2,5	4,0x40	14	6	A.4.14	1,62
MK	80×80×60×2,5	4,0x40	20	10	A.4.15	2,37
MK	100×100×60×2,5	4,0x40	24	16	A.4.16	4,57
MK	60×60×80×2,5	4,0x40	20	8	A.4.17	2,57
MK	80×80×80×2,5	4,0x40	28	14	A.4.18	3,76
MK	100×100×80×2,5	4,0x40	34	22	A.4.19	6,58
MK	60×60×100×2,5	4,0x40	26	10	A.4.20	3,68
MK	80×80×100×2,5	4,0x40	36	18	A.4.21	4,97
MK	100×100×100×2,5	4,0x40	44	28	A.4.22	8,98

[1)] see Annex 4

Table A.3.1 (continued)

Angle bracket type		Nails dimensions (mm)	Number of nails in		Position of nails shown in Figure [1)]	$F_{1,k}$ kN
			primary beam	secondary beam		
Isosceles Angle brackets with additional holes						
MK	50×50×35×2,0	4,0x40	8	4	A.4.23	0,89
MK	50×50×35×2,5	4,0x40	8	4	A.4.23	1,03
MK	50×50×50×2,0	4,0x40	8	4	A.4.24	1,21
MK	60×60×50×2,0	4,0x40	8	4	A.4.25	1,20
MK	60×60×50×2,5	4,0x40	8	4	A.4.25	1,38
MK	70×70×55×2,0	4,0x40	14	6	A.4.26	1,10
MK	70×70×55×2,5	4,0x40	14	6	A.4.26	1,27
MK	90×90×40×2,0	4,0x40	16	8	A.4.27	1,82
MK	90×90×40×2,5	4,0x40	16	8	A.4.27	2,10
MK	90×90×40×3,0	4,0x40	16	8	A.4.27	2,39
MK	90×90×65×2,0	4,0x40	12	8	A.4.28	2,93
MK	90×90×65×2,5	4,0x40	12	8	A.4.28	3,38
MK	100×100×90×2,0	4,0x40	12	8	A.4.29	2,31
MK	100×100×90×2,5	4,0x40	12	8	A.4.29	2,67
MK	105×105×90×3,0	4,0x40	12	8	A.4.30	3,04
Isosceles Angle brackets with a rib						
MKS	50×50×35×2,0	4,0x40	8	4	A.4.31	0,89
MKS	50×50×35×2,5	4,0x40	8	4	A.4.31	1,03
MKS	50×50×50×2,0	4,0x40	8	4	A.4.32	1,21
MKS	50×50×50×2,5	4,0x40	8	4	A.4.32	1,39
MKS	60×60×50×2,0	4,0x40	8	4	A.4.33	1,20
MKS	60×60×50×2,5	4,0x40	8	4	A.4.33	1,38
MKS	70×70×55×2,0	4,0x40	14	6	A.4.34	1,10
MKS	70×70×55×2,5	4,0x40	14	6	A.4.34	1,27
MKS	70×70×65×2,0	4,0x40	8	4	A.4.35	1,43
MKS	90×90×50×2,0	4,0x40	16	12	A.4.36	3,62
MKS	90×90×50×2,5	4,0x40	16	12	A.4.36	4,17
MKS	90×90×65×2,0	4,0x40	12	8	A.4.37	2,93
MKS	90×90×65×2,5	4,0x40	12	8	A.4.37	3,38
MKS	100×100×90×2,0	4,0x40	12	8	A.4.38	2,31
MKS	100×100×90×2,5	4,0x40	12	8	A.4.38	2,67
MKS	105×105×90×3,0	4,0x40	12	8	A.4.39	3,04

[1)] see Annex 4

Table A.3.1 (continued)

Angle bracket type		Nails dimensions (mm)	Number of nails in		Position of nails shown in Figure [1)]	$F_{1,k}$ kN
			primary beam	secondary beam		
Non-isosceles Angle brackets with a rib						
MKNS	90×50×50×2,0	4,0x40	8	12	A.4.40	3,46
MKNS	90×50×50×2,5	4,0x40	8	12	A.4.40	3,81
MKNS	150×90×65×2,0	4,0x40	12	20	A.4.41	2,29
MKNS	150×90×65×2,5	4,0x40	12	20	A.4.41	2,61
MKNS	150×100×90×2,0	4,0x40	8	16	A.4.42	4,91
MKNS	150×100×90×2,5	4,0x40	8	16	A.4.42	5,39
Non-isosceles Angle brackets						
MKN	120×40×40×2,0	4,0x40	6	12	A.4.43	1,59
MKN	80×40×40×2,0	4,0x40	6	6	A.4.44	0,99
MKN	120×40×60×2,0	4,0x40	10	20	A.4.45	3,72
MKN	80×40×60×2,0	4,0x40	10	10	A.4.46	2,05
MKN	100×60×60×2,0	4,0x40	16	14	A.4.47	2,75
MKN	200×40×40×2,0	4,0x40	6	24	A.4.48	1,21
Non-isosceles Angle brackets with additional holes						
MKN	90×50×50×2,0	4,0x40	8	12	A.4.49	3,46
MKN	90×50×50×2,5	4,0x40	8	12	A.4.49	3,81
MKN	95×45×40×2,5	4,0x40	8	8	A.4.50	2,10
MKN	135×45×40×2,0	4,0x40	8	16	A.4.51	2,35
MKN	135×45×40×2,5	4,0x40	8	16	A.4.51	2,46
[1)] see Annex 4						

When load-carrying capacity is calculated the possibility of splitting caused by the tension perpendicular to the grain, shall be taken into account.

A.3.2. Timber beam to timber column connections with the angle brackets

A.3.2.1. Timber beam to timber column connections with the angle brackets at the top of the beam.

The calculation model of timber beam to timber column connection with the angle brackets is showed in the Figure A.3.2.

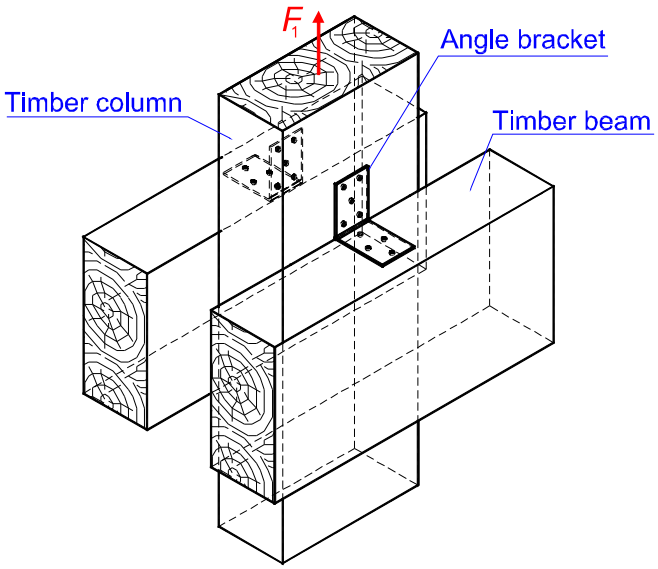

Figure A.3.2. Typical installation of the angle brackets in the timber beam to timber column connections. Angle brackets at the top of the beam

Table A.3.2. Characteristic load-carrying capacities $F_{1,k}$ of timber beam to timber column connection for load direction according Figure A.3.2.

Angle bracket type		Nails dimensions (mm)	Number of nails in		Position of nails shown in Figure [1)]	$F_{1,k}$ kN
			column	beams		
Isosceles Angle brackets						
MK	60×60×40×2,0	4,0x40	2×5	2×3	A.4.52	2,78
MKS	60×60×50×2,0	4,0x40	2×4	2×2	A.4.53	2,78
[1)] see Annex 4						

When load-carrying capacity is calculated the possibility of splitting caused by the tension perpendicular to the grain, shall be taken into account.

A.3.2.2. Timber beam to timber column connections with the angle brackets under the beam

The calculation model of timber beam to timber beam connection with the angle brackets under the beam is showed in the Figure A.3.3.

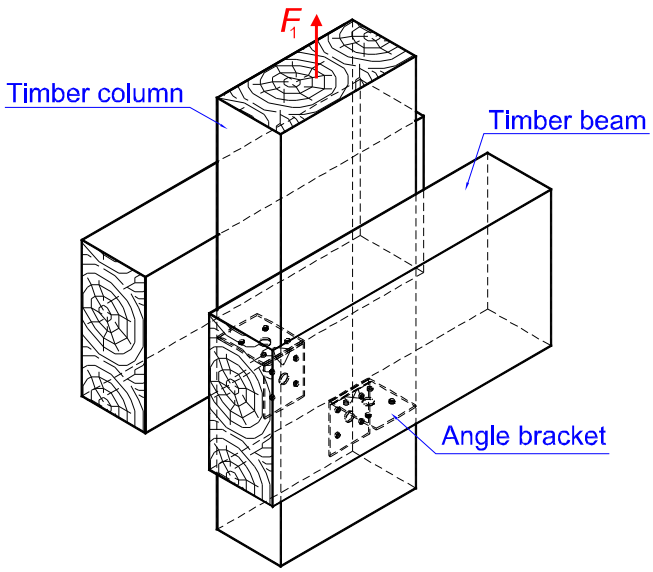

Figure A.3.3. Typical installation of the angle brackets in the timber beam to timber column connections. Angle brackets under the beam

Table A.3.3. Characteristic load-carrying capacities $F_{1,k}$ of timber beam to timber column connection for load direction according Figure A.3.3.

Angle bracket type		Nails dimensions (mm)	Number of nails in		Position of nails shown in Figure [1)]	$F_{1,k}$ kN
			column	beams		
Isosceles Angle brackets						
MK	60×60×40×2,0	4,0x40	2×5	2×3	A.4.54	5,10
MKS	60×60×50×2,0	4,0x40	2×4	2×2	A.4.54	6,71
[1)] see Annex 4						

When load-carrying capacity is calculated the possibility of splitting caused by the tension perpendicular to the grain, shall be taken into account.

A.3.2.3. Timber beam to timber column connections with the angle brackets in the vertical axis.

The calculation model of timber beam to timber beam connection with the angle brackets placed in the vertical axis is showed in the Figure A.3.4.

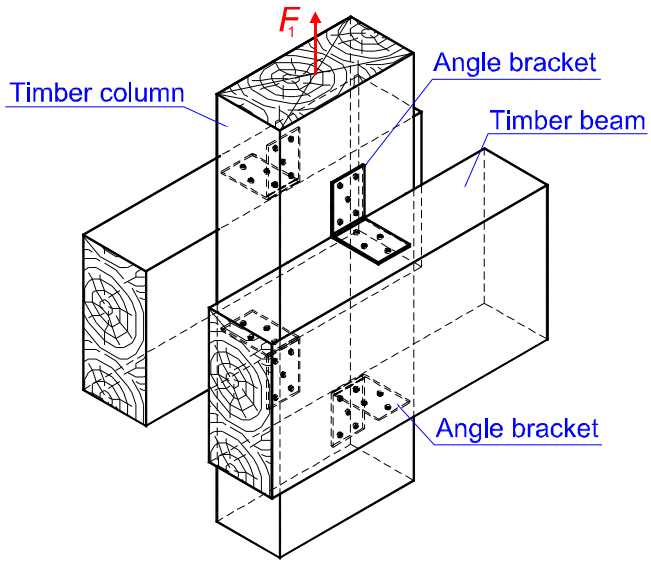

Figure A.3.4. Calculation model of timber beam to timber column connection with a pair of angle brackets in vertical axis

Table A.3.4. Characteristic load-carrying capacities $F_{1,k}$ of timber beam to timber column connection for load direction according Figure A.3.4.

Angle bracket type		Nails dimensions (mm)	Number of nails in		Position of nails shown in Figure [1)]	$F_{1,k}$ kN
			column	beams		
Isosceles Angle brackets						
MK	60×60×40×2,0	4,0x40	4×5	4×3	A.4.56	7,88
MKS	60×60×50×2,0	4,0x40	4×4	4×2	A.4.57	9,48
[1)] see Annex D						

When load-carrying capacity is calculated the possibility of splitting caused by the tension perpendicular to the grain, shall be taken into account

ANNEX 4. Number and positions of nails in the angle brackets

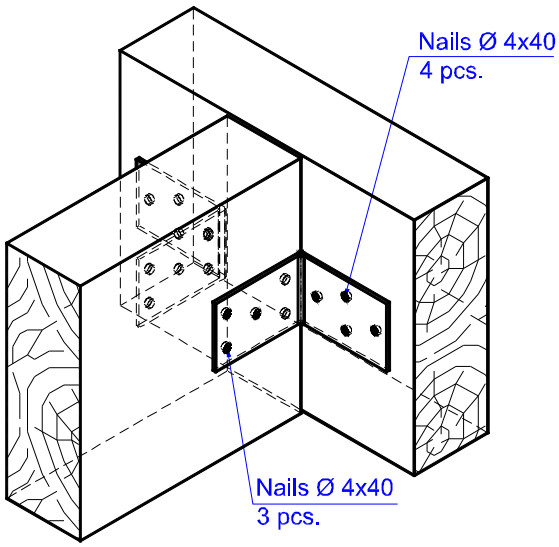

Figure A.4.1. Number and position of nails in the timber beam to timber beam connection with the angle brackets MK 60×60×40×2,0

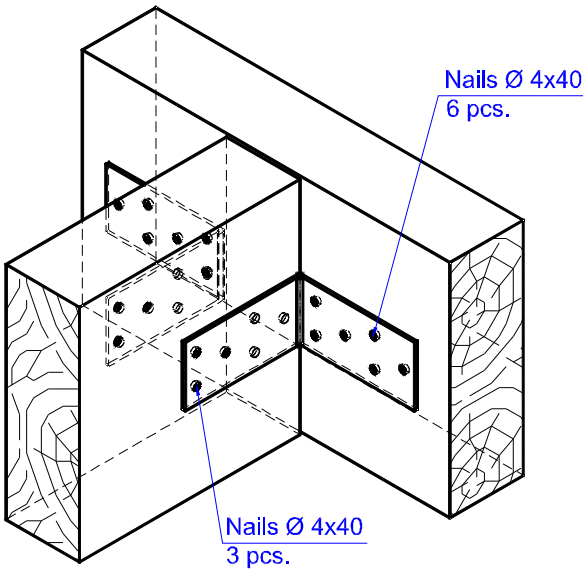

Figure A.4.2. Number and position of nails in the timber beam to timber beam connection with the angle brackets MK 80×80×40×2,0

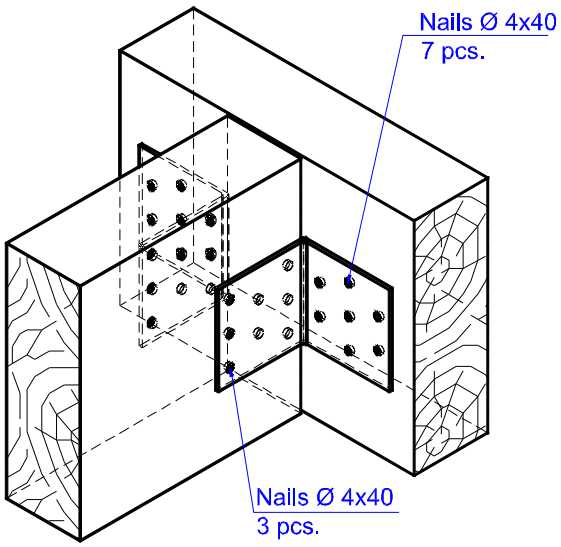

Figure A.4.3. Number and position of nails in the timber beam to timber beam connection with the angle brackets MK 60×60×60×2,0

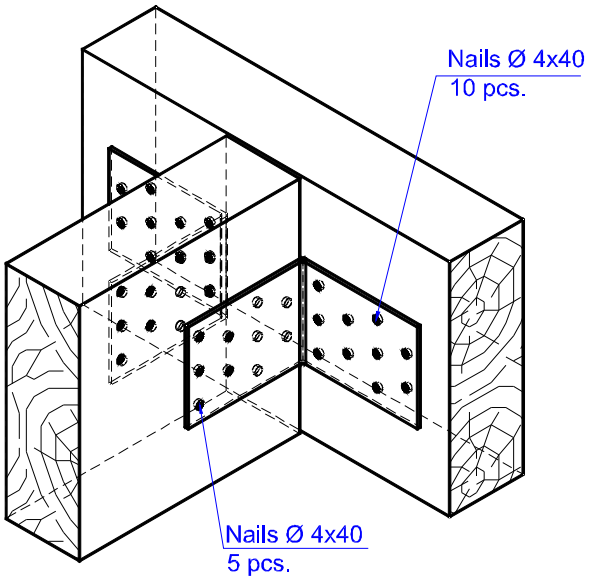

Figure A.4.4. Number and position of nails in the timber beam to timber beam connection with the angle brackets MK 80×80×60×2,0

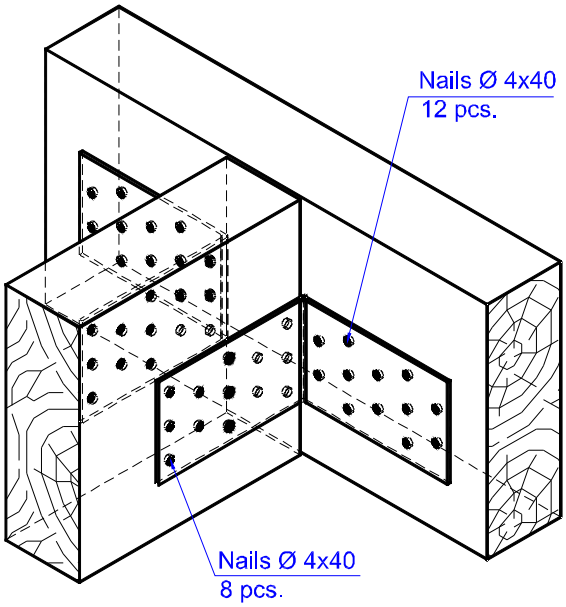

Figure A.4.5. Number and position of nails in the timber beam to timber beam connection with the angle brackets Angle bracket MK 100×100×60×2,0

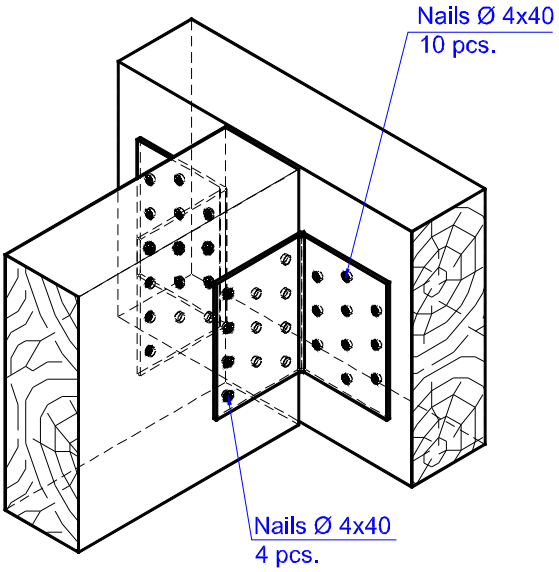

Figure A.4.6. Number and position of nails in the timber beam to timber beam connection with the angle brackets MK 60×60×80×2,0

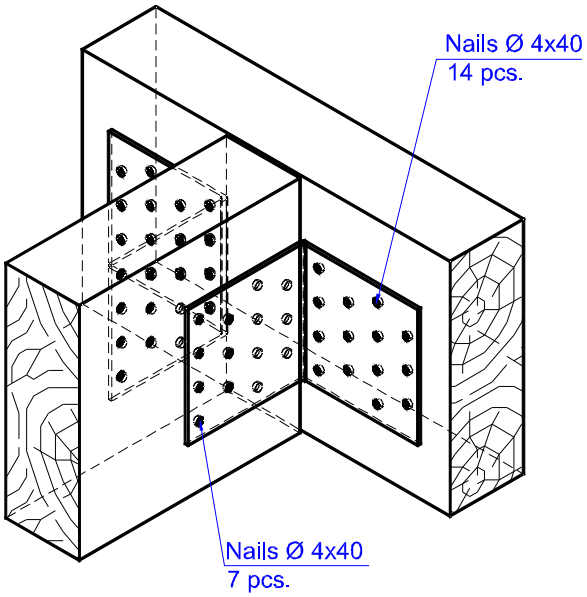

Figure A.4.7. Number and position of nails in the timber beam to timber beam connection with the angle brackets MK 80×80×80×2,0

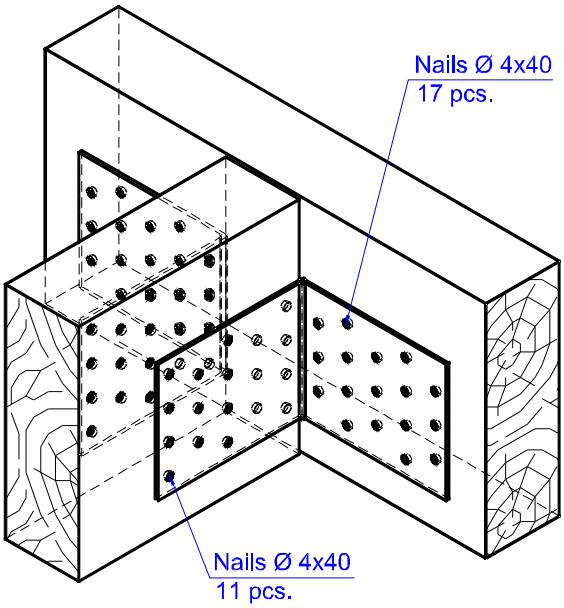

Figure A.4.8. Number and position of nails in the timber beam to timber beam connection with the angle brackets MK 100×100×80×2,0

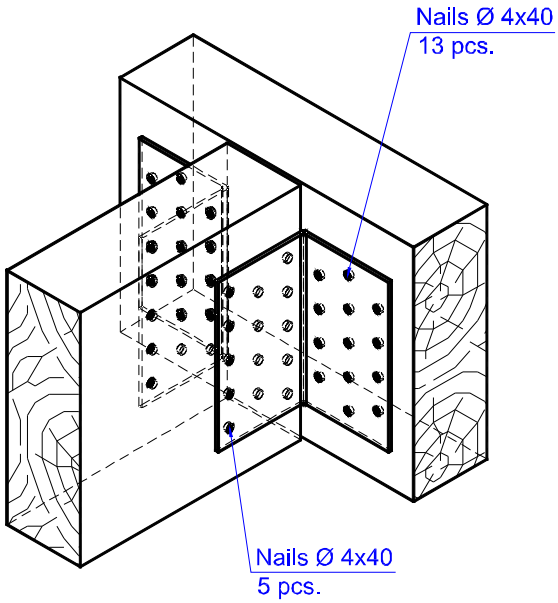

Figure A.4.9. Number and position of nails in the timber beam to timber beam connection with the angle brackets MK 60×60×100×2,0

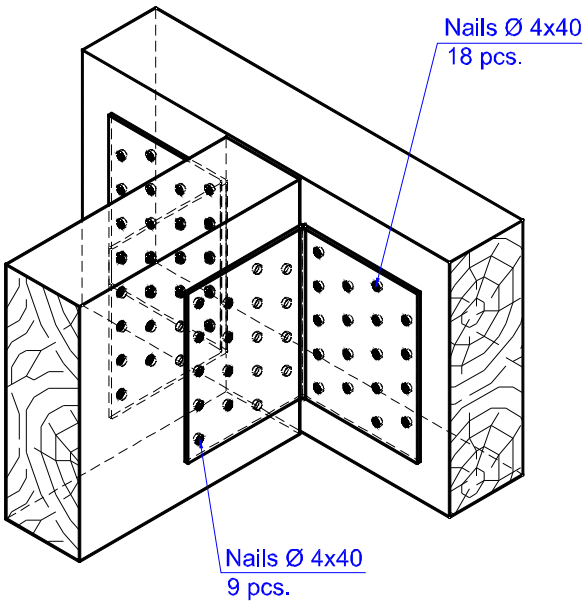

Figure A.4.10. Number and position of nails in the timber beam to timber beam connection with the angle brackets MK 80×80×100×2,0

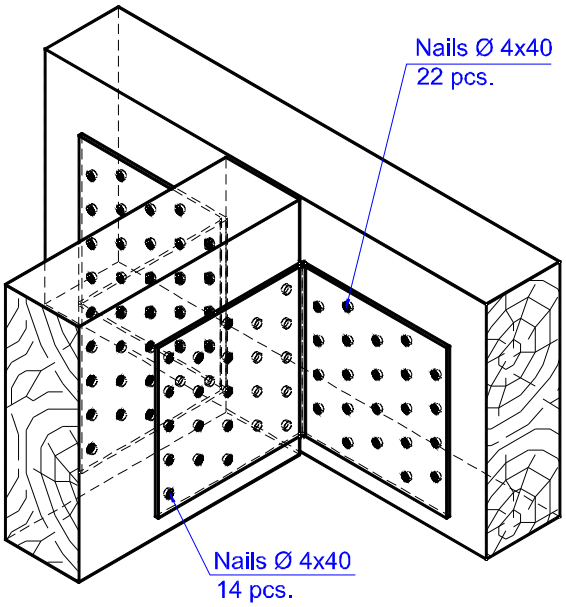

Figure A.4.11. Number and position of nails in the timber beam to timber beam connection with the angle brackets MK 100×100×100×2,0

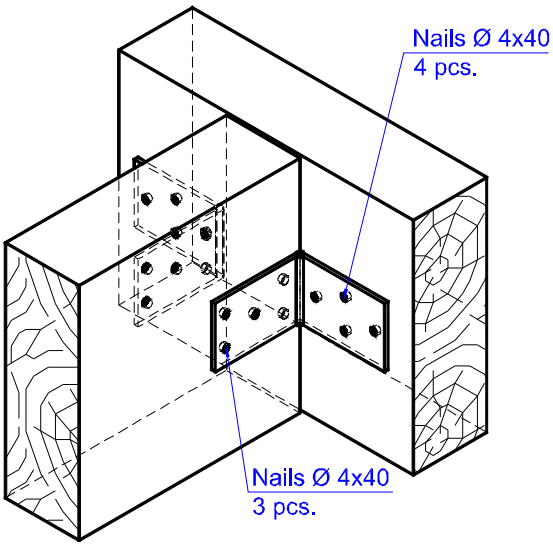

Figure A.4.12. Number and position of nails in the timber beam to timber beam connection with the angle brackets MK 60×60×40×2,5

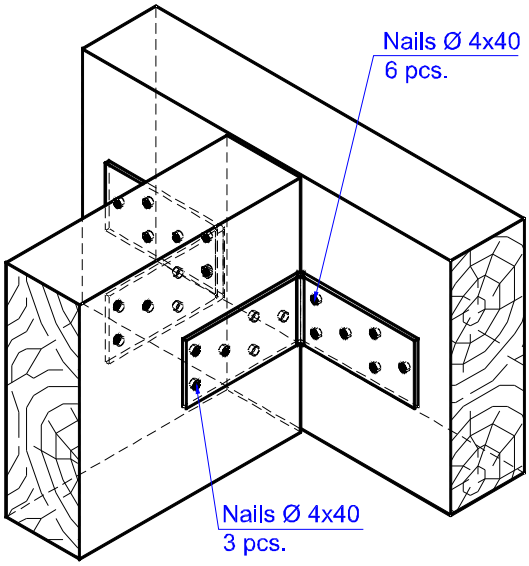

Figure A.4.13. Number and position of nails in the timber beam to timber beam connection with the angle brackets MK 80×80×40×2,5

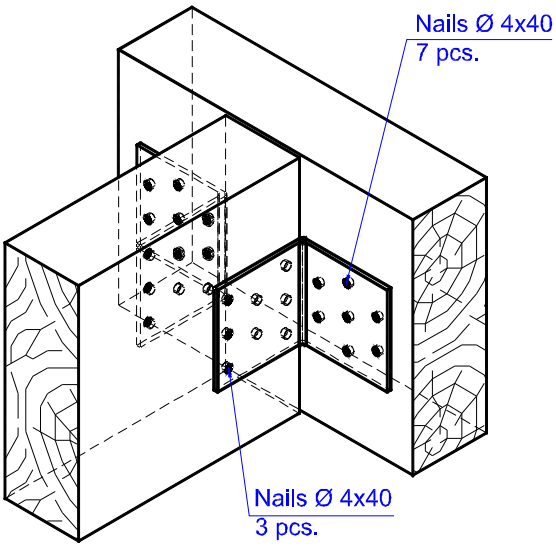

Figure A.4.14. Number and position of nails in the timber beam to timber beam connection with the angle brackets MK 60×60×60×2,5

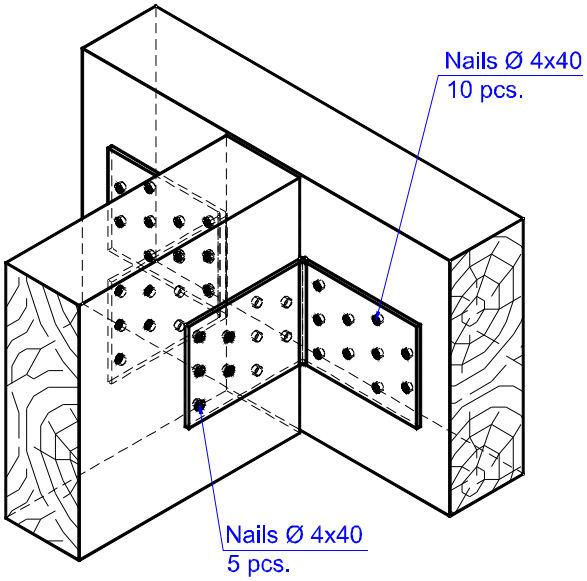

Figure A.4.15. Number and position of nails in the timber beam to timber beam connection with the angle brackets MK 80×80×60×2,5

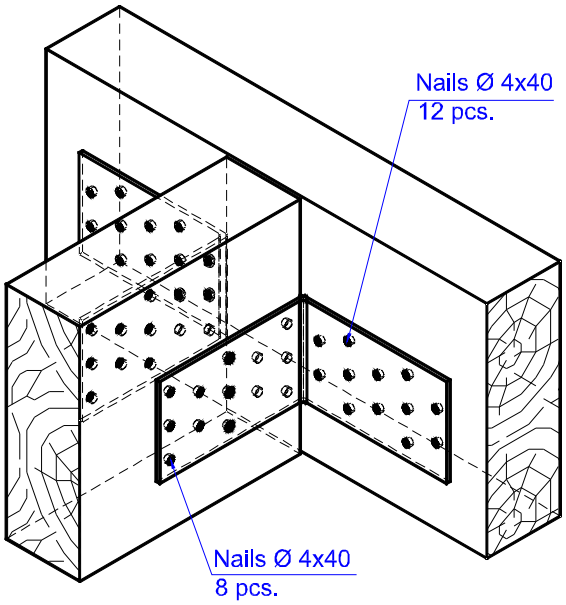

Figure A.4.16. Number and position of nails in the timber beam to timber beam connection with the angle brackets MK 100×100×60×2,5

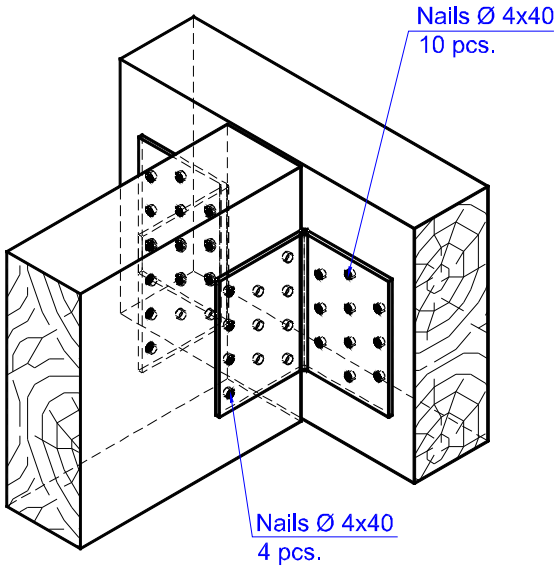

Figure A.4.17. Number and position of nails in the timber beam to timber beam connection with the angle brackets MK 60×60×80×2,5

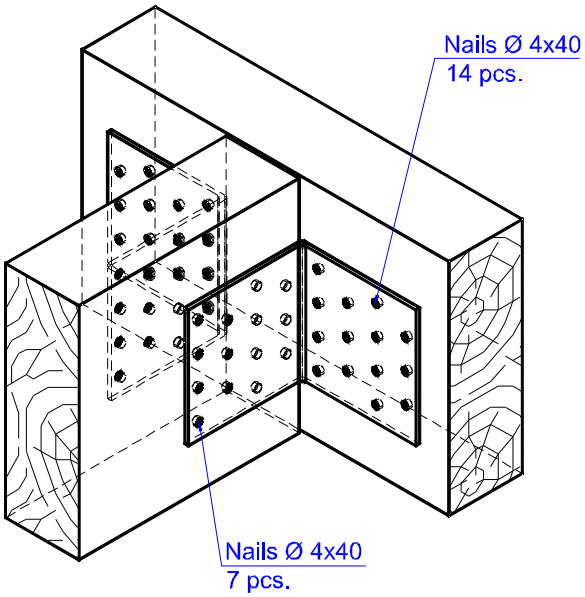

Figure A.4.18. Number and position of nails in the timber beam to timber beam connection with the angle brackets MK 80×80×80×2,5

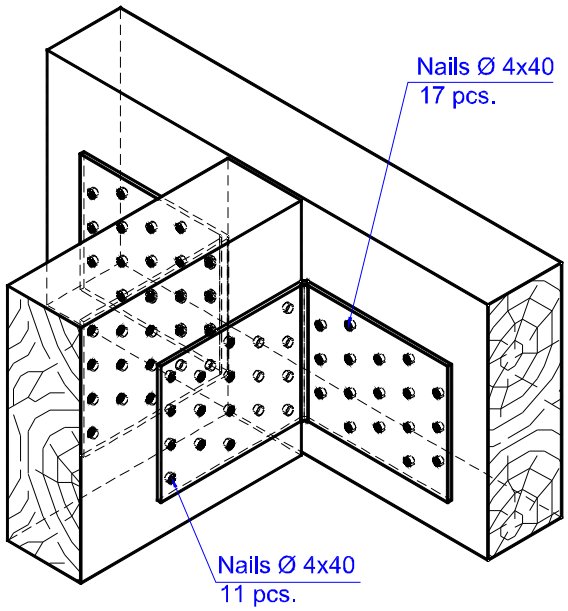

Figure A.4.19. Number and position of nails in the timber beam to timber beam connection with the angle brackets MK 100×100×80×2,5

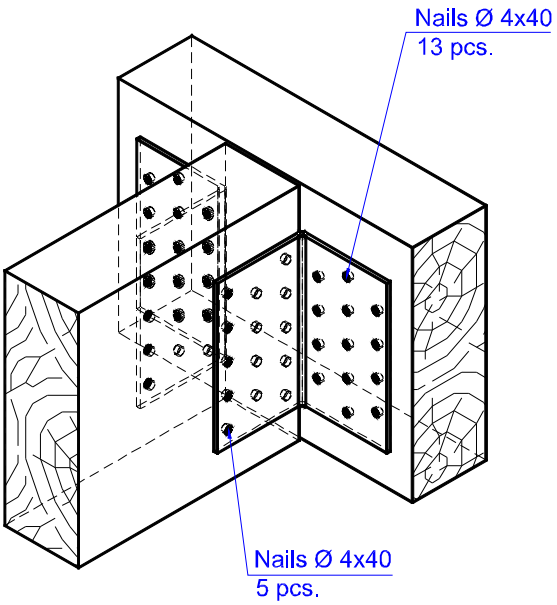

Figure A.4.20. Number and position of nails in the timber beam to timber beam connection with the angle brackets MK 60×60×100×2,5

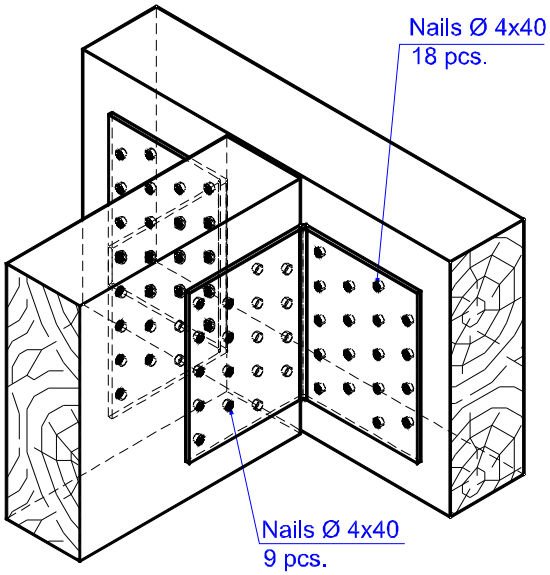

Figure A.4.21. Number and position of nails in the timber beam to timber beam connection with the angle brackets MK 80×80×100×2,5

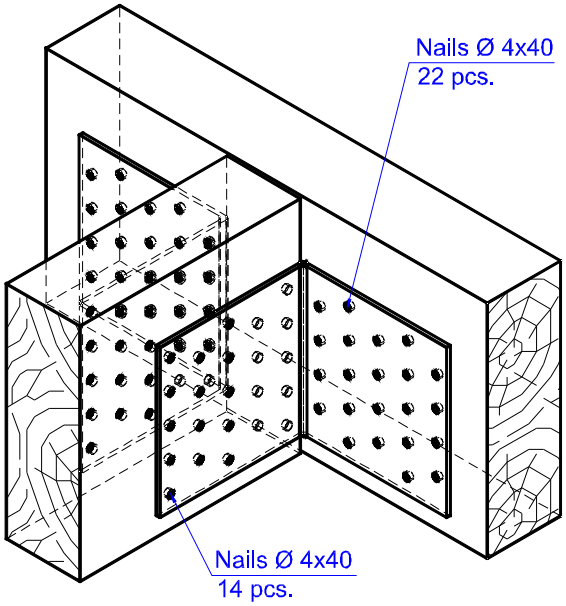

Figure A.4.22. Number and position of nails in the timber beam to timber beam connection with the angle brackets MK 100×100×100×2,5

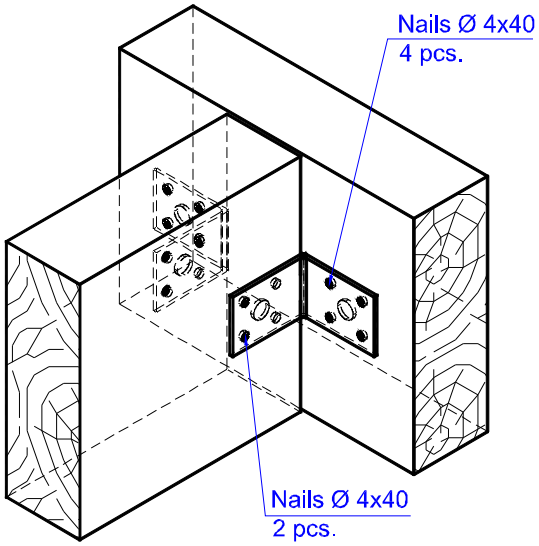

Figure A.4.23. Number and position of nails in the timber beam to timber beam connection with the angle brackets MK 50×50×35×2,0 and MK 50×50×35×2,5

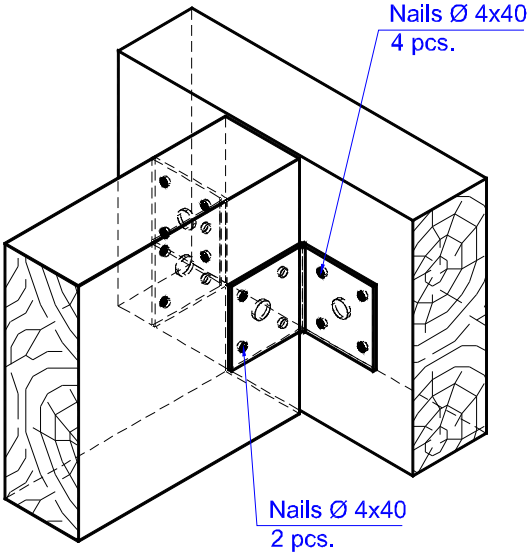

Figure A.4.24. Number and position of nails in the timber beam to timber beam connection with the angle brackets MK 50×50×50×2,0

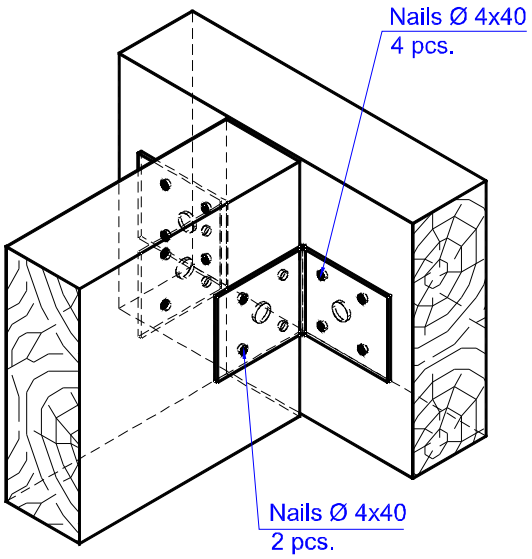

Figure A.4.25. Number and position of nails in the timber beam to timber beam connection with the angle brackets MK 60×60×50×2,0 and MK 60×60×50×2,5

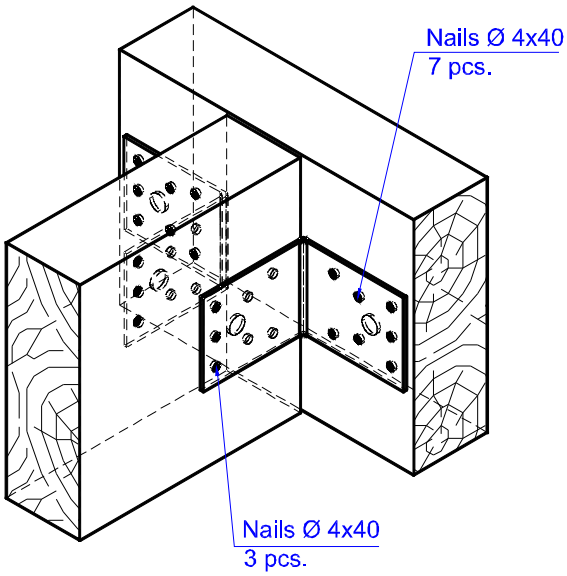

Figure A.4.26. Number and position of nails in the timber beam to timber beam connection with the angle brackets MK 70×70×55×2,0 and MK 70×70×55×2,5

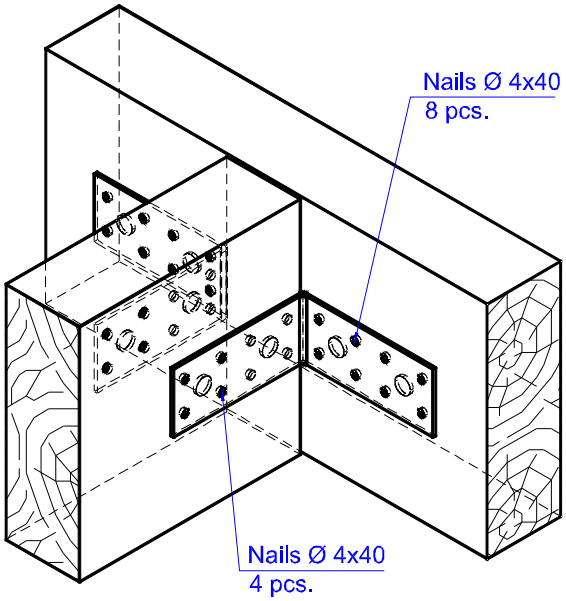

Figure A.4.27. Number and position of nails in the timber beam to timber beam connection with the angle brackets MK 90×90×40×2,0 , MK 90×90×65×2,5 and MK 90×90×65×3,0

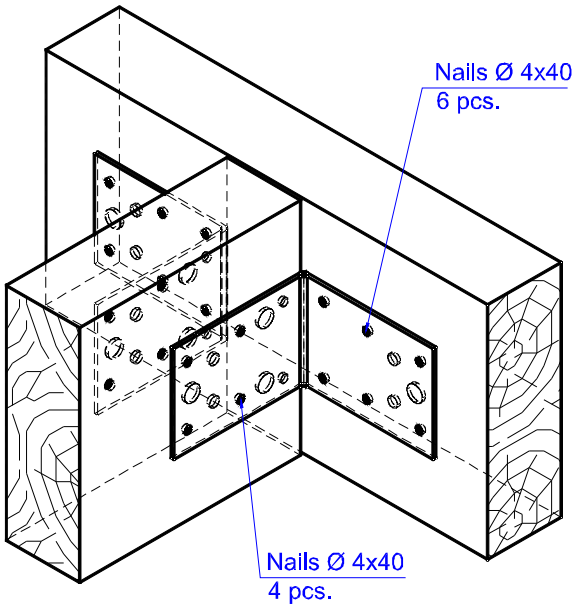

Figure A.4.28. Number and position of nails in the timber beam to timber beam connection with the angle brackets MK 90×90×65×2,0 and MK 90×90×65×2,5

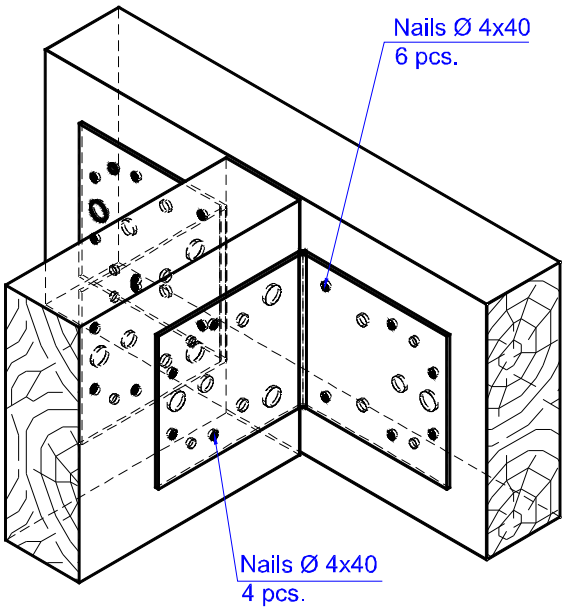

Figure A.4.29. Number and position of nails in the timber beam to timber beam connection with the angle brackets MK 100×100×90×2,0 and MK 100×100 ×90×2,5

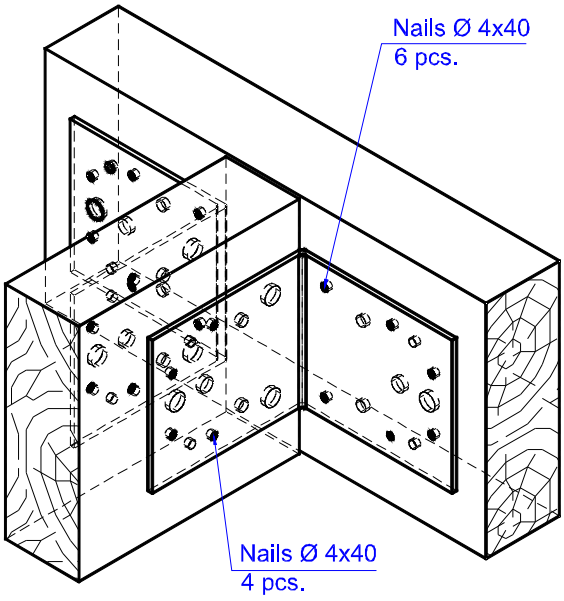

Figure A.4.30. Number and position of nails in the timber beam to timber beam connection with the angle brackets MK 105×105×90×3,0

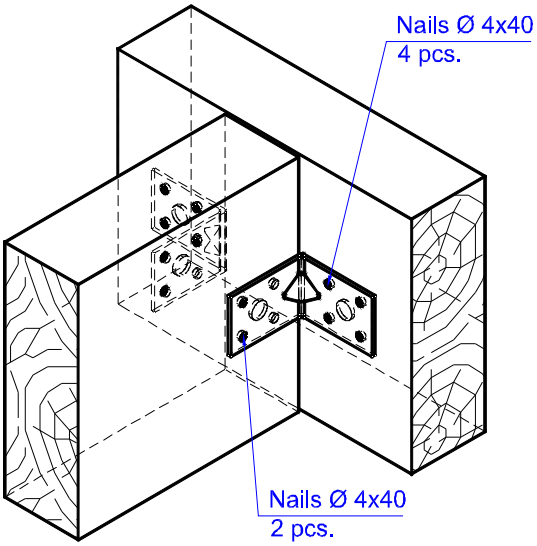

Figure A.4.31. Number and position of nails in the timber beam to timber beam connection with the angle brackets MKS 50×50×35×2,0 and MKS 50×50×35×2,5

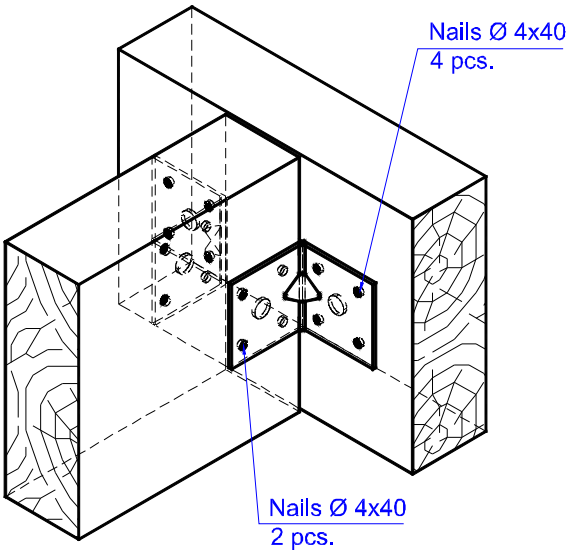

Figure A.4.32. Number and position of nails in the timber beam to timber beam connection with the angle brackets MKS 50×50×50×2,0 and MKS 50×50×50×2,5

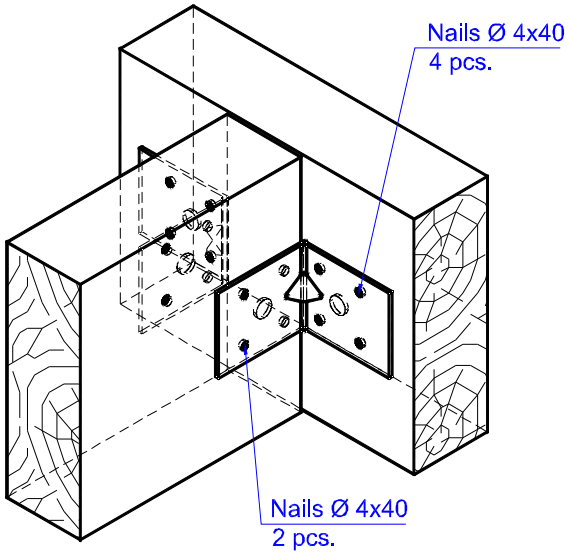

Figure A.4.33. Number and position of nails in the timber beam to timber beam connection with the angle brackets MKS 60×60×50×2,0 and MKS 60×60×50×2,5

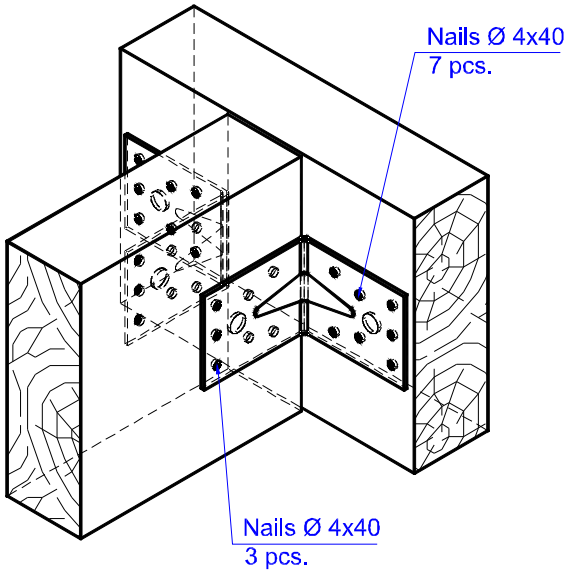

Figure A.4.34. Number and position of nails in the timber beam to timber beam connection with the angle brackets MKS 70×70×55×2,0 and MKS 70×70×55×2,5

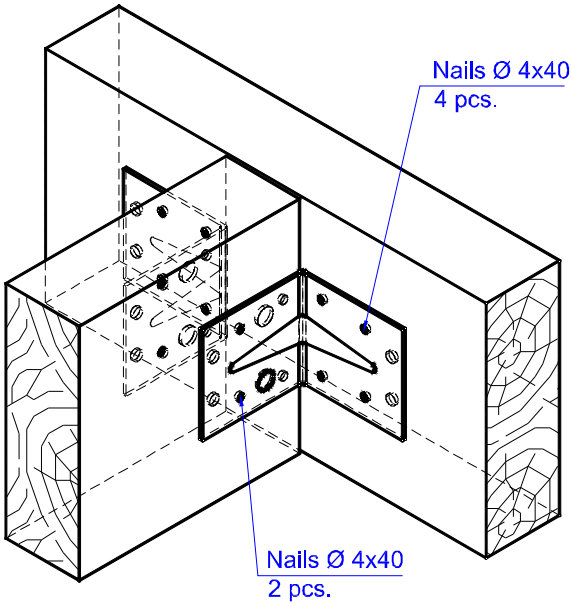

Figure A.4.35. Number and position of nails in the timber beam to timber beam connection with the angle brackets MKS 70×70×65×2,0

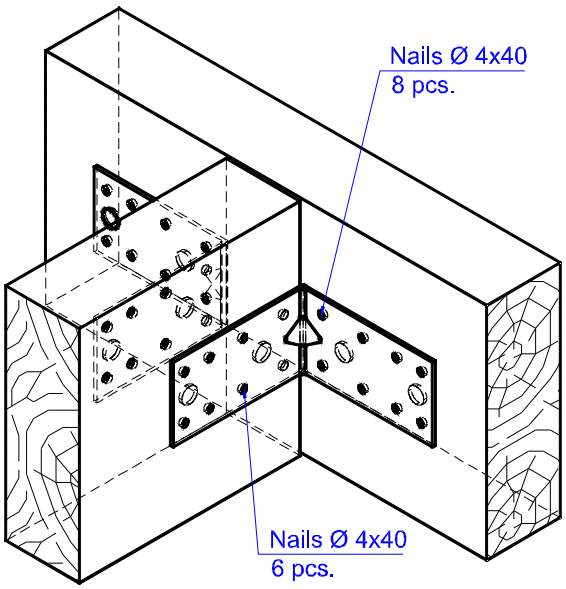

Figure A.4.36. Number and position of nails in the timber beam to timber beam connection with the angle brackets MKS 90×90×50×2,0 and MKS 90×90×50×2,5

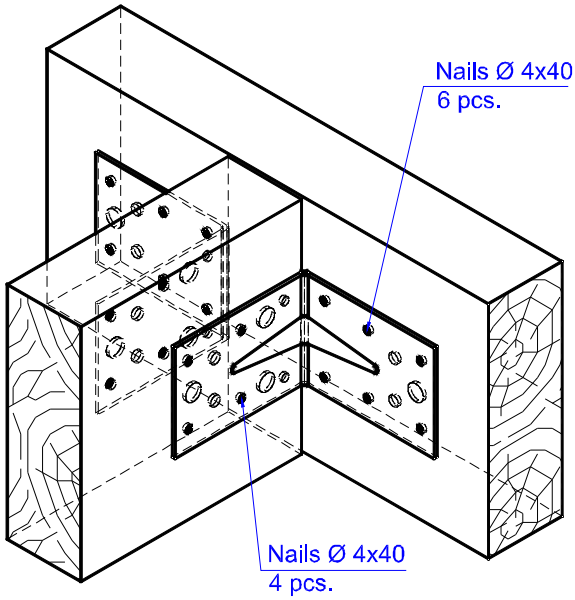

Figure A.4.37. Number and position of nails in the timber beam to timber beam connection with the angle brackets MKS 90×90×65×2,0 and MKS 90×90×65×2,5

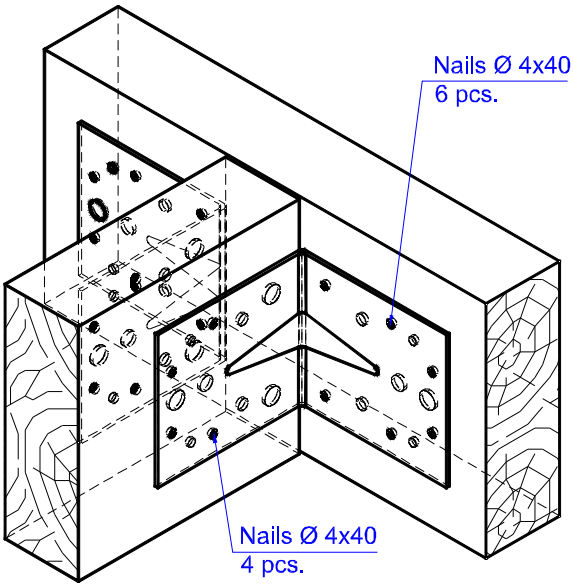

Figure A.4.38. Number and position of nails in the timber beam to timber beam connection with the angle brackets MKS 100×100×90×2,0 and MKS 100×100×90×2,5

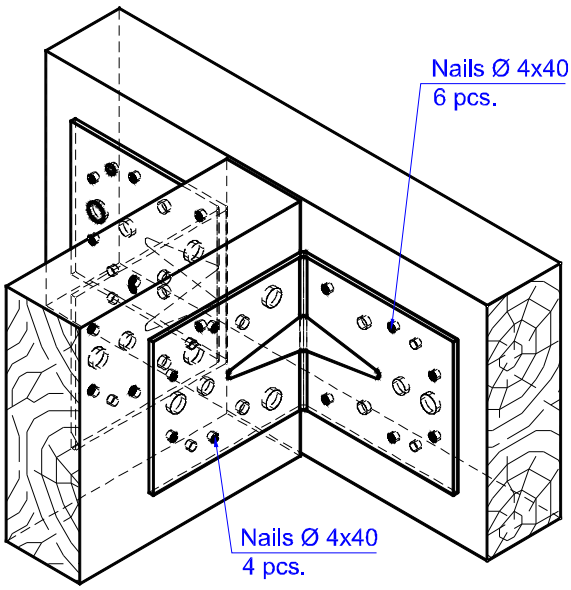

Figure A.4.39. Number and position of nails in the timber beam to timber beam connection with the angle brackets MKS 105×105×90×3,0

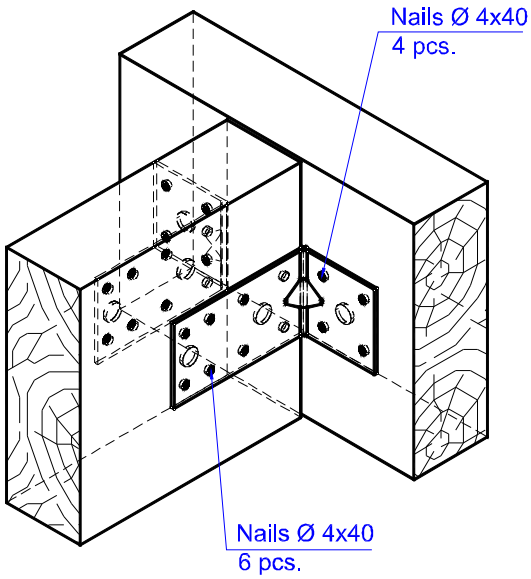

Figure A.4.40. Number and position of nails in the timber beam to timber beam connection with the angle brackets MKNS 90×50×50×2,0 and MKNS 90×50×50×2,5

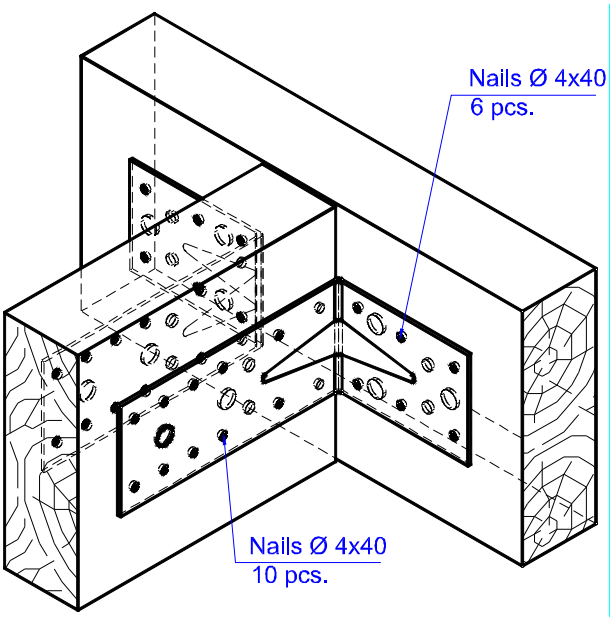

Figure A.4.41. Number and position of nails in the timber beam to timber beam connection with the angle brackets MKNS 150×90×65×2,0 and MKNS 150×90×65×2,5

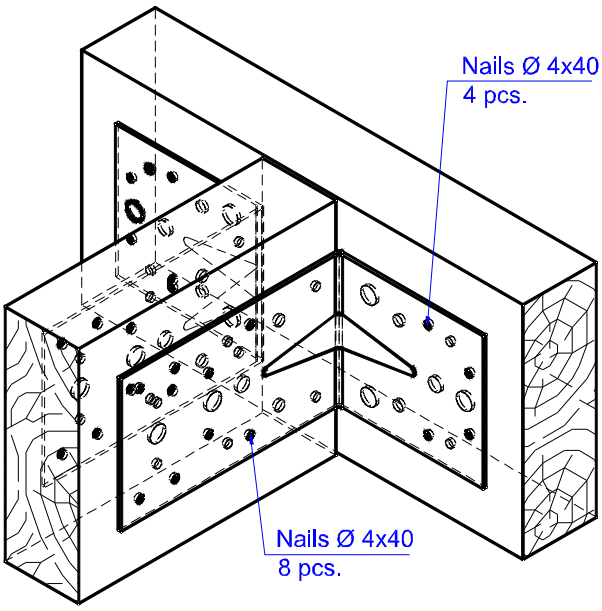

Figure A.4.42. Number and position of nails in the timber beam to timber beam connection with the angle brackets MKNS 150×100×90×2,0 and MKNS 150×100×90×2,5

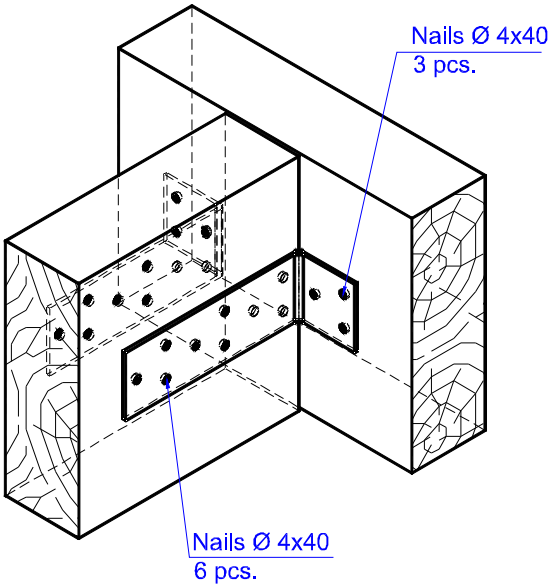

Figure A.4.43. Number and position of nails in the timber beam to timber beam connection with the angle brackets MKN 120×40×40×2,0

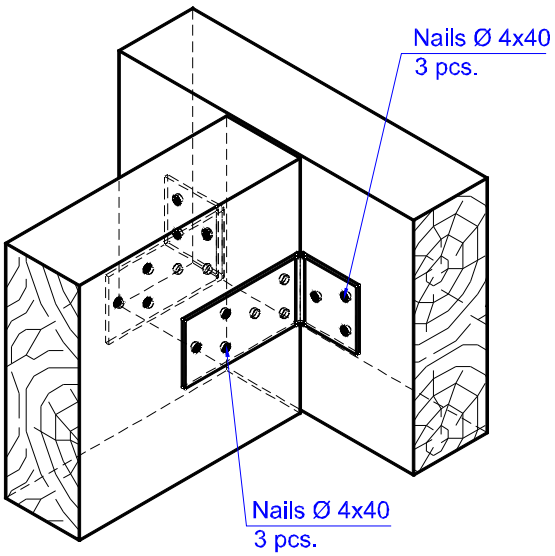

Figure A.4.44. Number and position of nails in the timber beam to timber beam connection with the angle brackets MKN 80×40×40×2,0

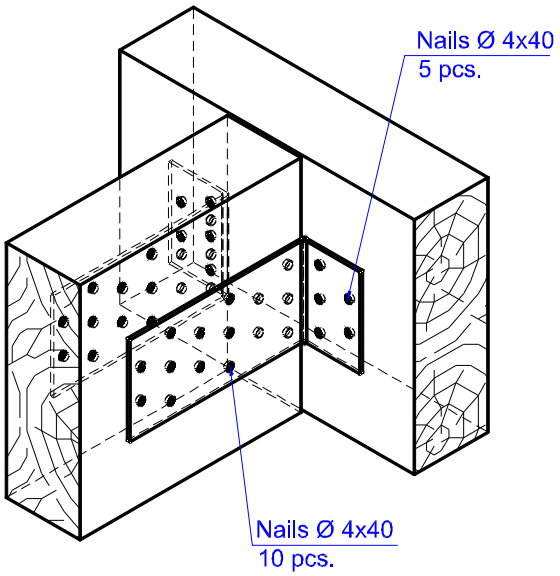

Figure A.4.45. Number and position of nails in the timber beam to timber beam connection with the angle brackets MKN 120×40×60×2,0

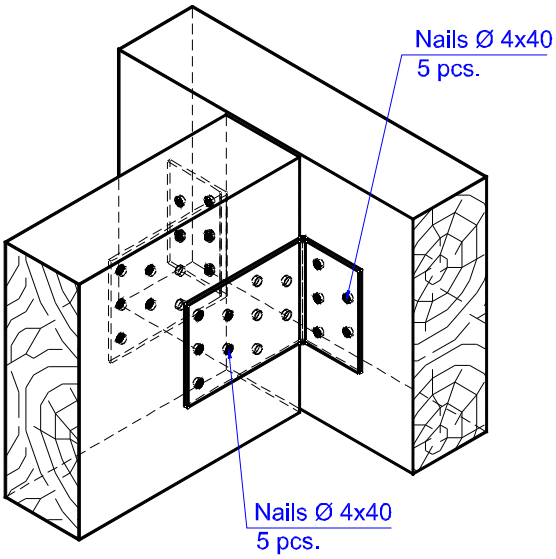

Figure A.4.46. Number and position of nails in the timber beam to timber beam connection with the angle brackets MKN 80×40×60×2,0

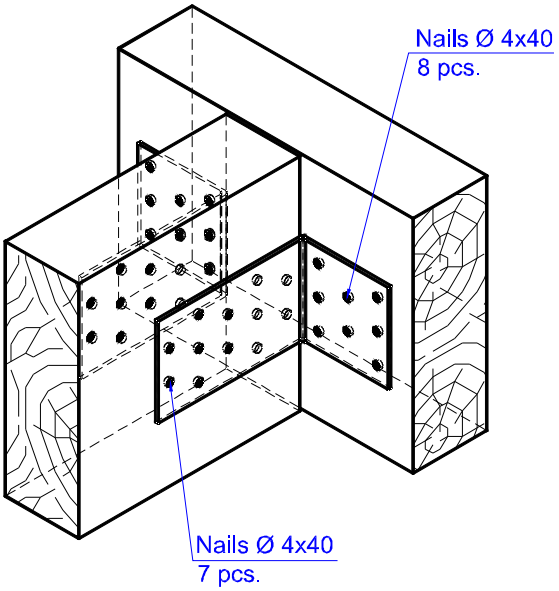

Figure A.4.47. Number and position of nails in the timber beam to timber beam connection with the angle brackets MKN 100×60×60×2,0

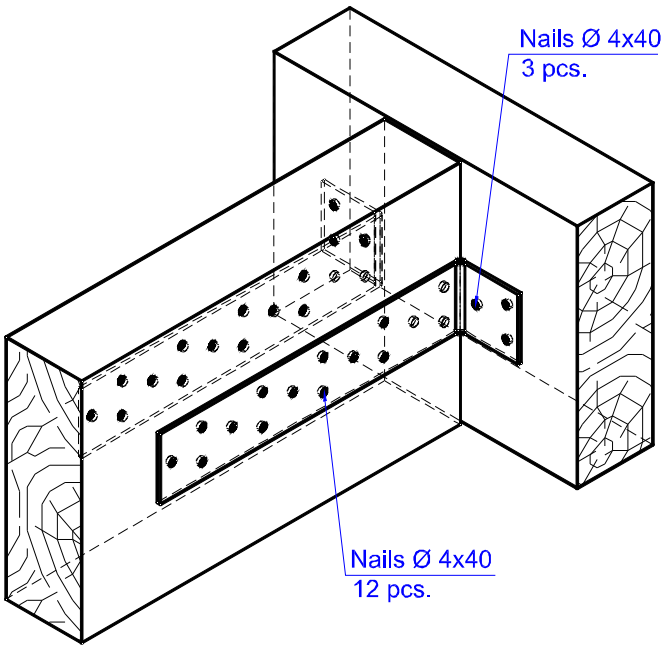

Figure A.4.48. Number and position of nails in the timber beam to timber beam connection with the angle brackets MKN 200×40×40×2,0

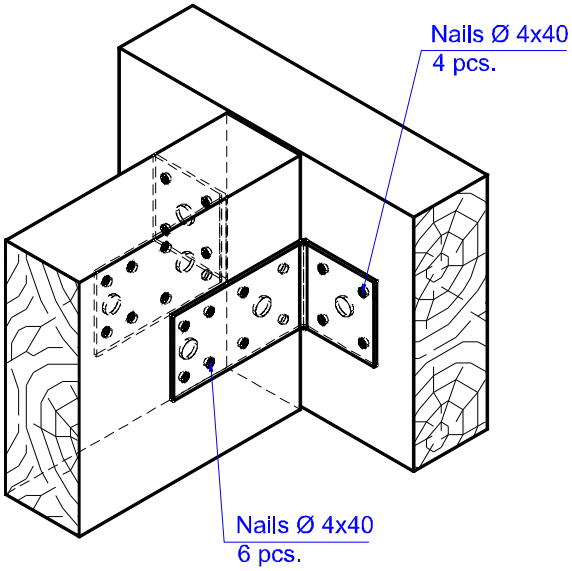

Figure A.4.49. Number and position of nails in the timber beam to timber beam connection with the angle brackets MKN 90×50×50×2,0 and MKN 90×50×50×2,5

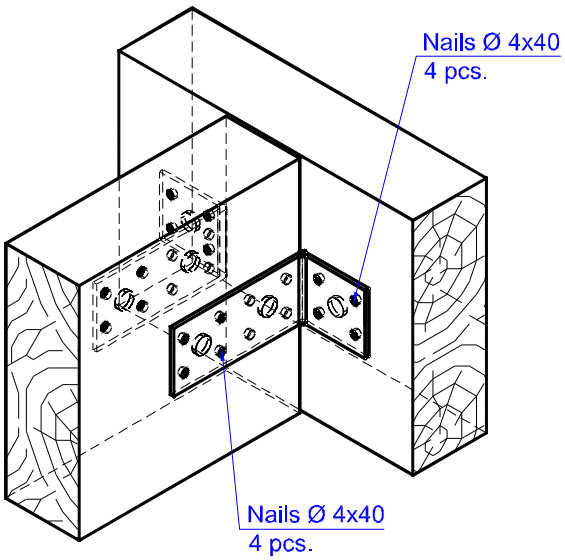

Figure A.4.50. Number and position of nails in the timber beam to timber beam connection with the angle brackets MKN 95×45×40×2,5

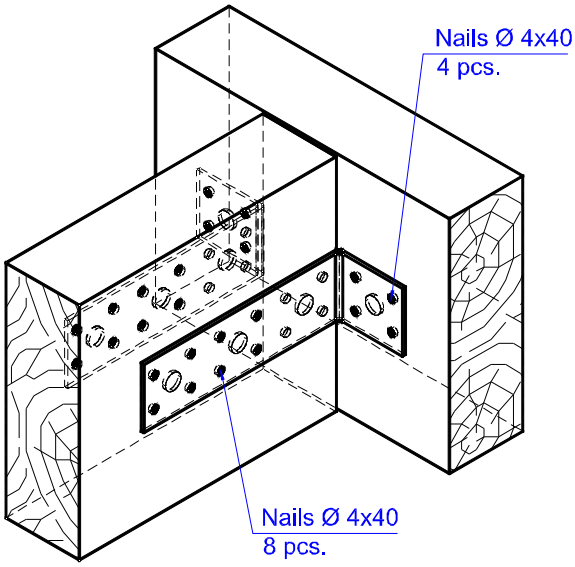

Figure A.4.51. Number and position of nails in the timber beam to timber beam connection with the angle brackets MKN 135×45×40×2,0 and MKN 135×45×40×2,5

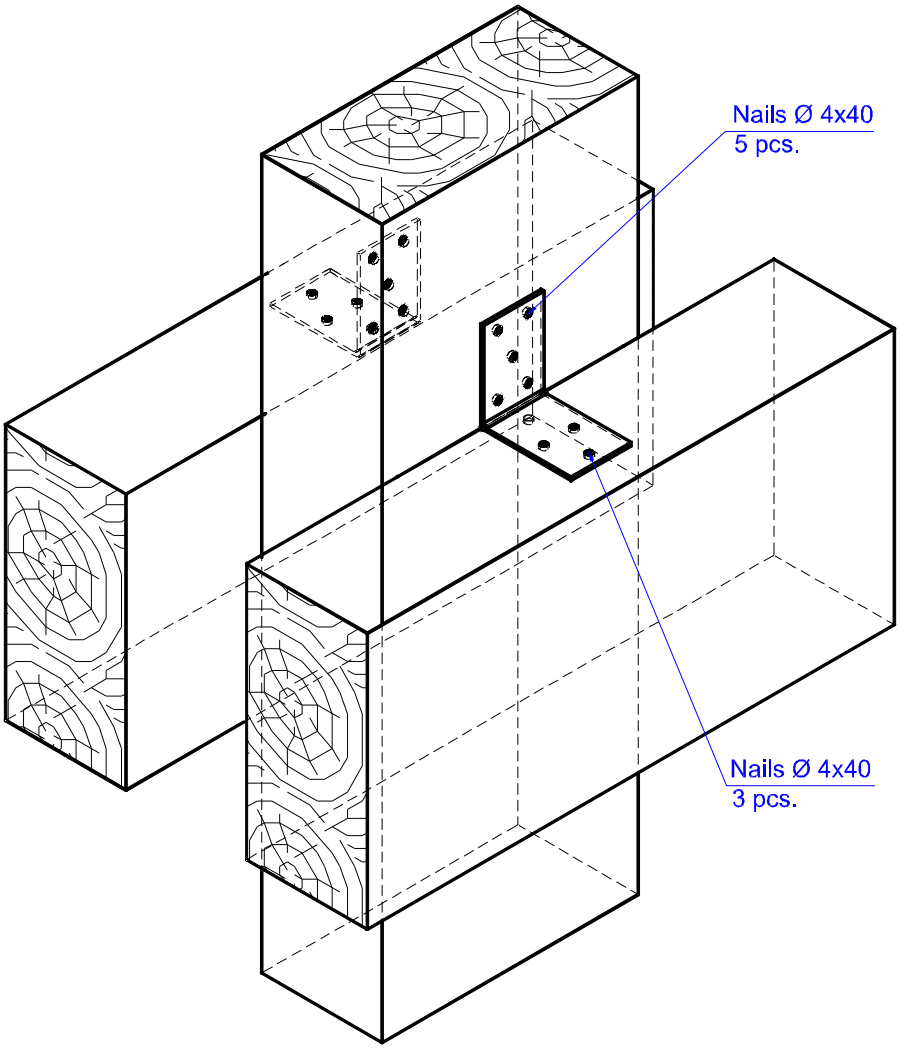

Figure A.4.52. Number and position of nails in the timber beam to timber column connection with the angle brackets MK 60×60×40×2,0

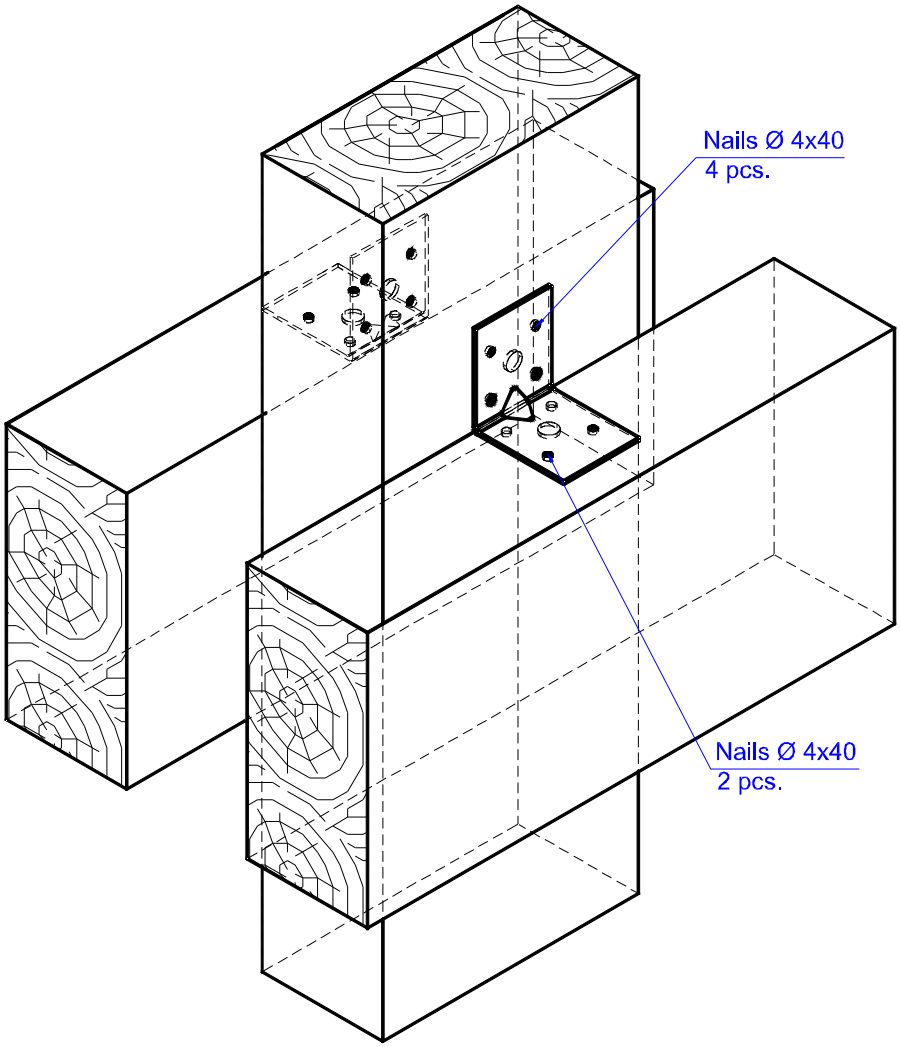

Figure A.4.53. Number and position of nails in the timber beam to timber column connection with the angle brackets MKS 60×60×50×2,0

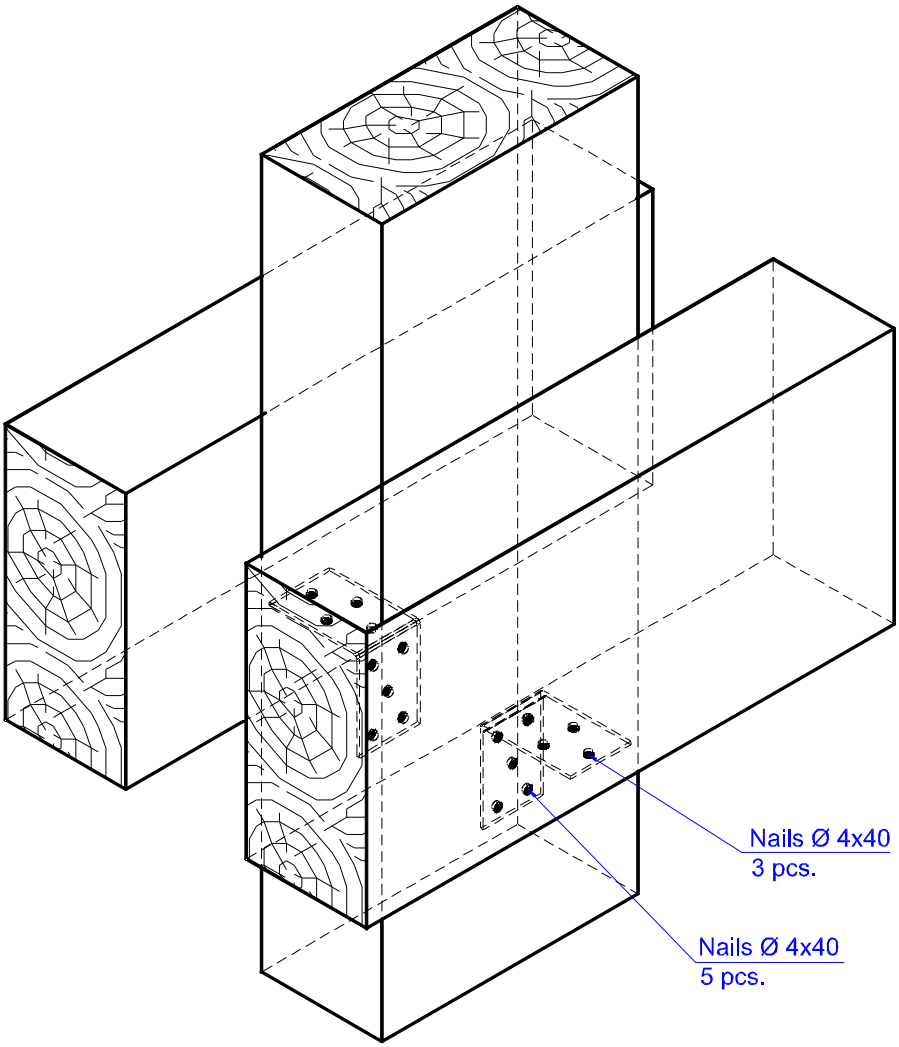

Figure A.4.54. Number and position of nails in the timber beam to timber column connection with the angle brackets MK 60×60×40×2,0

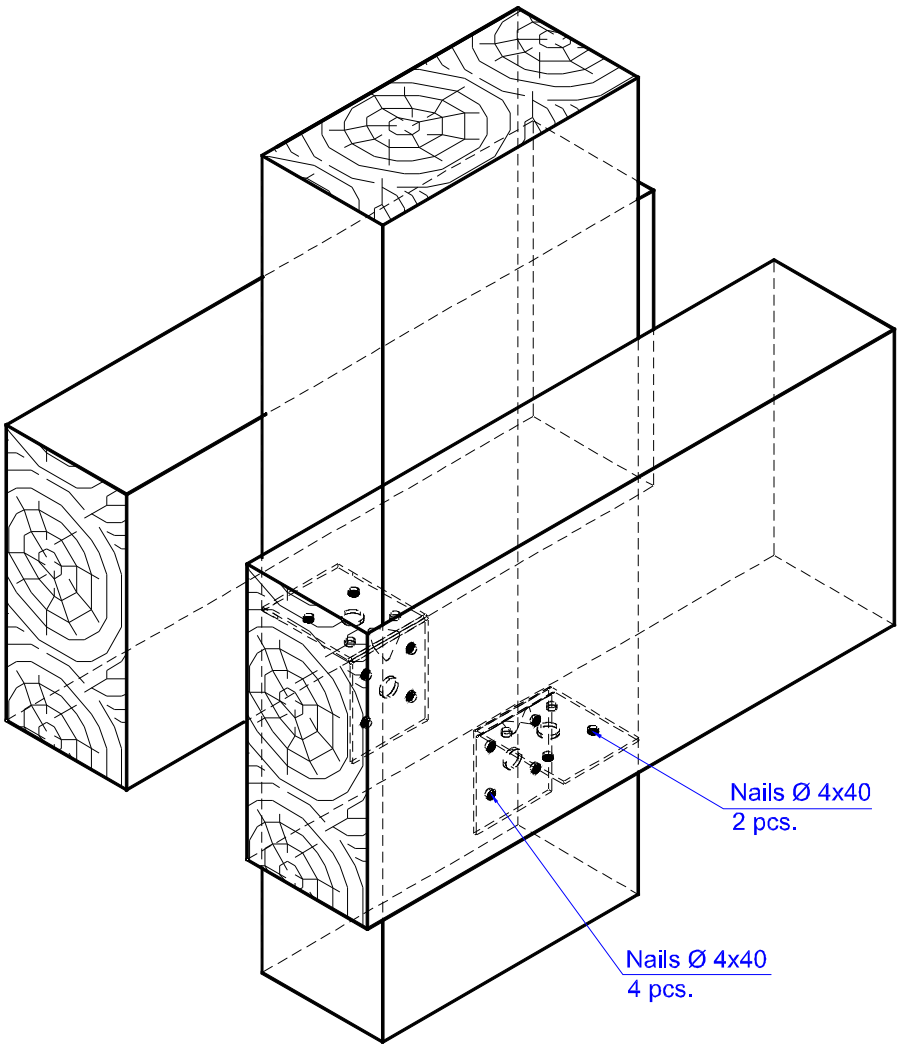

Figure A.4.55. Number and position of nails in the timber beam to timber column connection with the angle brackets MKS 60×60×50×2,0

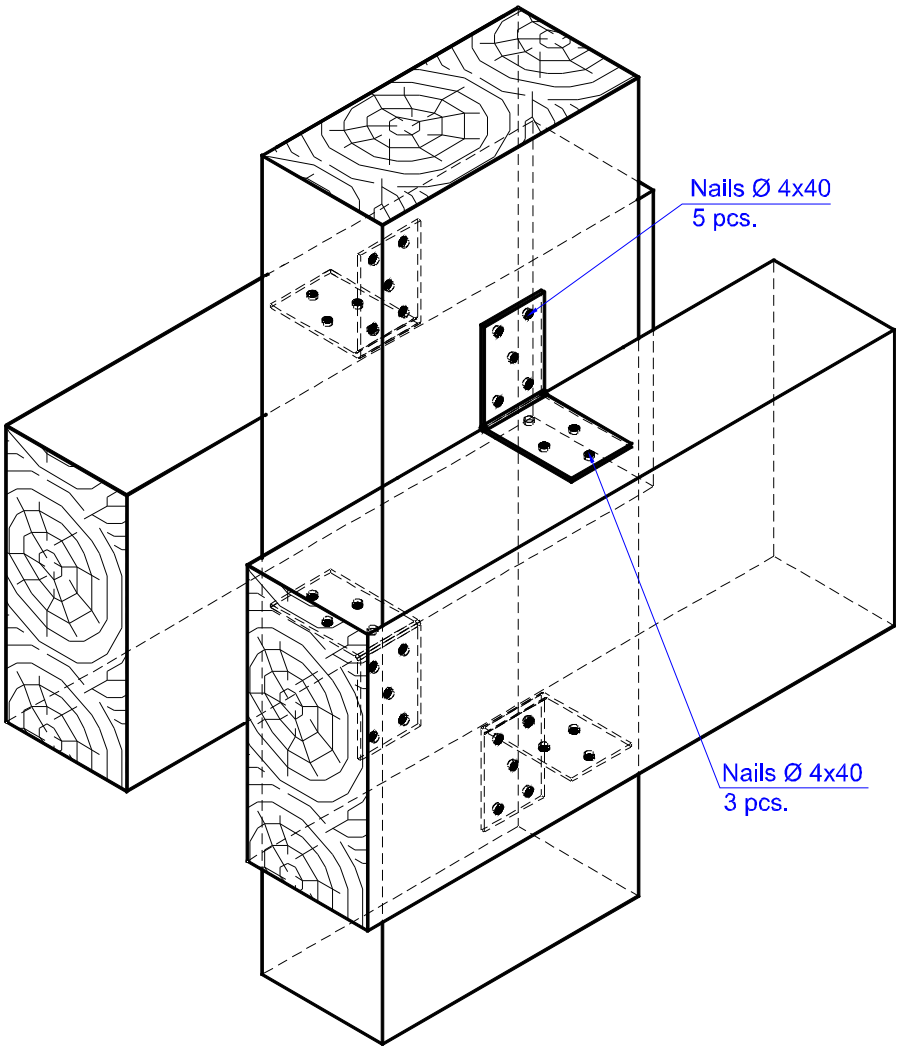

Figure A.4.56. Number and position of nails in the timber beam to timber column connection with the angle brackets MK 60×60×40×2,0

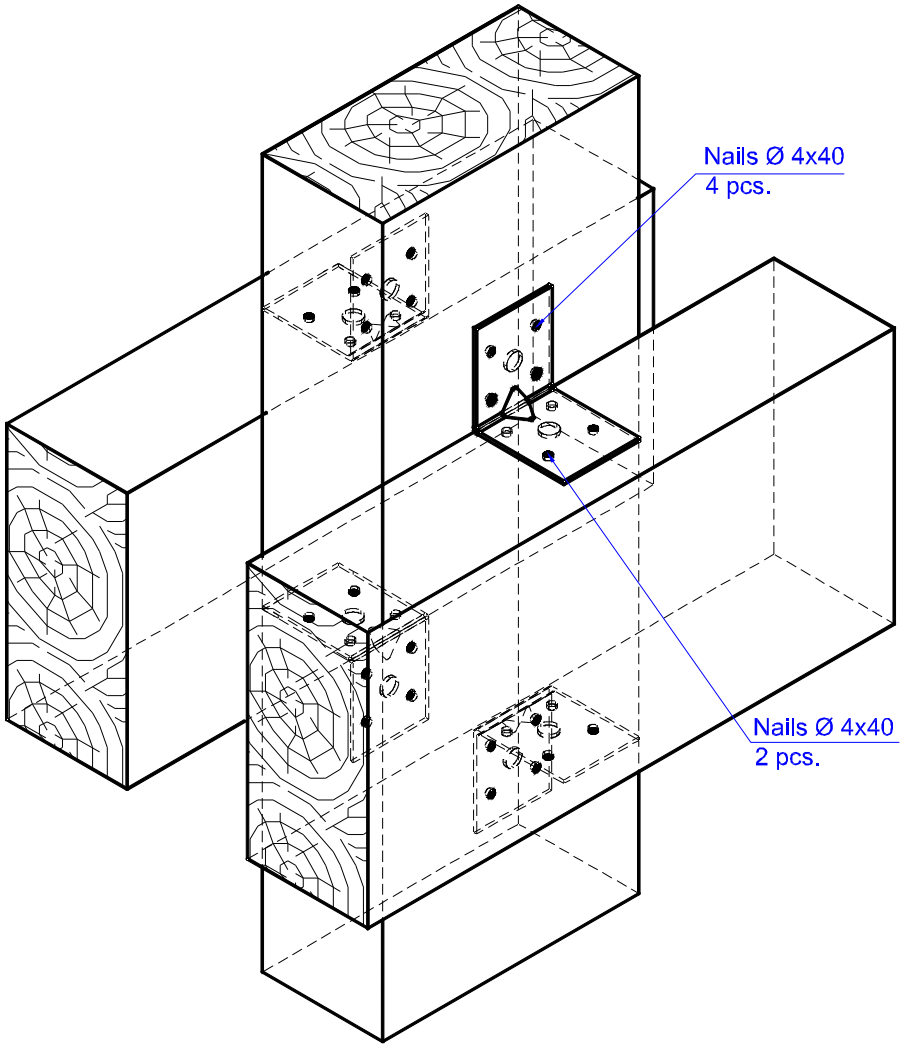

Figure A.4.57. Number and position of nails in the timber beam to timber column connection with the angle brackets MKS 60×60×50×2,0